Advanced Lighting Management Unit

Check for Samples: LP39542

FEATURES

- **Audio Synchronization for Color/RGB LEDs**
- **Command-Based PWM-Controlled RGB LED Drivers**
- **Programmable ON/OFF Blinking Sequences for RGB LED**
- **High-Current Driver for Flash LED With Built-In Timing and Safety Feature**
- **4+2 or 6 Low-Voltage Constant-Current White LED Drivers With Programmable 8-Bit Adjustment (0...25 mA/LED)**
- **High-Efficiency Boost DC-DC Converter**
- **I^2C Compatible Interface**
- **Possibility for External PWM Dimming Control**
- **Possibility for Clock Synchronization for RGB Timing**
- **Ambient Light and Temperature Sensing Possibility**
- **Small package – DSBGA-36, 3.0x3.0x0.6mm**

APPLICATIONS

- **Cellular Phones**
- **PDAs, MP3 players**

DESCRIPTION

LP39542 is an advanced lighting management unit for handheld devices. It drives any phone lights including display backlights, RGB, keypad and camera flash LEDs. The boost DC-DC converter drives high current loads with high efficiency. White LED backlight drivers are high efficiency low voltage structures with excellent matching and automatic fade in/ fade out function. The stand-alone command based RGB controller is feature rich and easy to configure. Built-in audio synchronization feature allows user to synchronize the color LEDs to audio input. Integrated high current driver can drive camera flash LED or motor/vibra. Internal ADC can be used for ambient light or temperature sensing. The flexible I^2C interface allows easy control of LP39542. Small DSBGA package together with minimum number of external components is a best fit for handheld devices.

Please be aware that an important notice concerning availability, standard warranty, and use in critical applications of Texas Instruments semiconductor products and disclaimers thereto appears at the end of this data sheet.

All trademarks are the property of their respective owners.

PRODUCTION DATA information is current as of publication date. Products conform to specifications per the terms of the Texas Instruments standard warranty. Production processing does not necessarily include testing of all parameters.

Copyright © 2007–2013, Texas Instruments Incorporated

Typical Applications

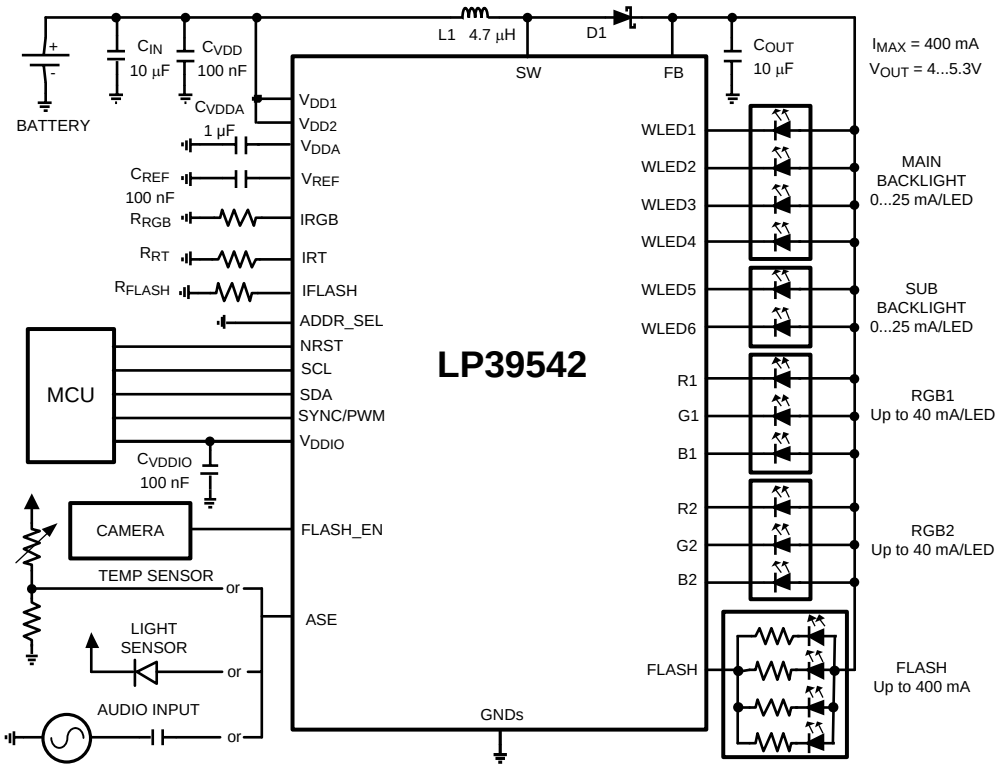

Copyright © 2007–2013, Texas Instruments Incorporated

Connection Diagrams

DSBGA-36 Package, 3.0 x 3.0 x 0.6 mm, 0.5 mm pitch, Package Number YZR0036 or DSBGA-36 Package, 3.0 x 3.0 x 0.65 mm, 0.5 mm pitch, Package Number YPG0036

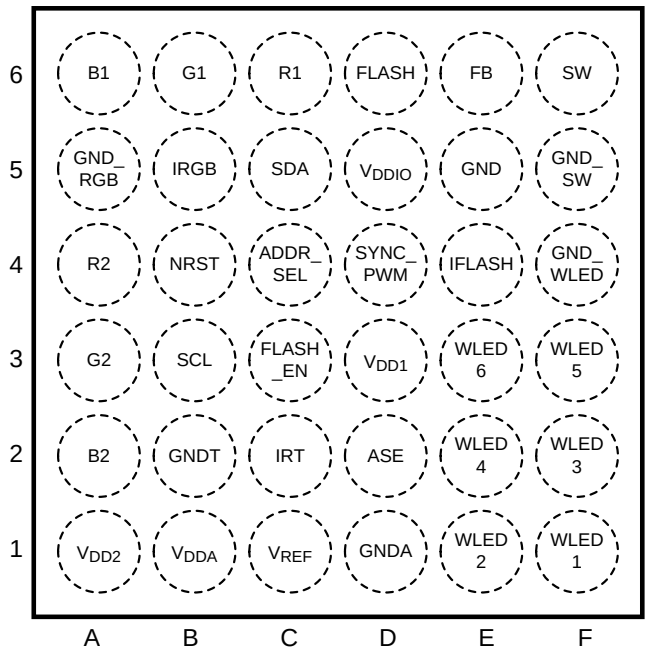

TOP VIEW

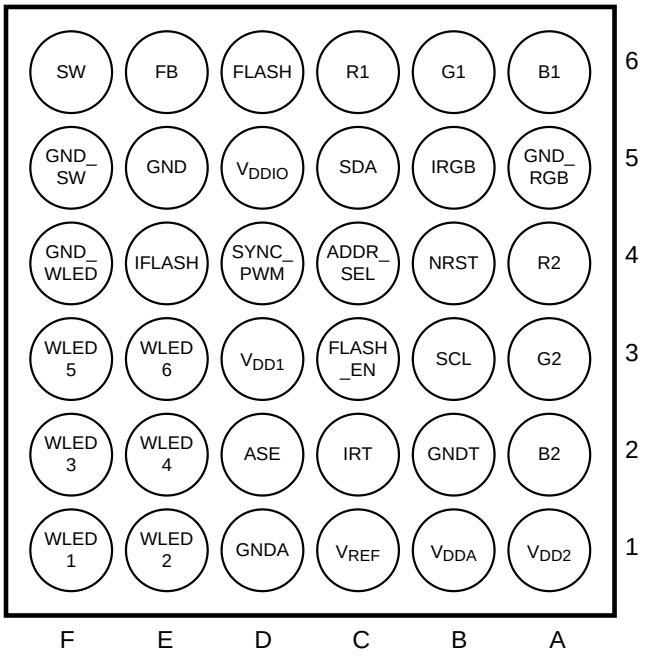

BOTTOM VIEW

PIN DESCRIPTIONS

Pin No.	Name	Type	Description
6F	SW	Output	Boost Converter Power Switch
6E	FB	Input	Boost Converter Feedback
6D	FLASH	Output	High Current Flash Output
6C	R1	Output	Red LED 1 Output
6B	G1	Output	Green LED 1 Output
6A	B1	Output	Blue LED 1 Output
5F	GND_SW	Ground	Power Switch Ground
5E	GND	Ground	Ground
5D	V_{DDIO}	Power	Supply Voltage for Logic Input/Output Buffers and Drivers
5C	SDA	Logic Input/Output	Serial Data In/Out (I^2C)
5B	IRGB	Input	Bias Current Set Resistor for RGB Drivers
5A	GND_RGB	Ground	Ground for RGB Currents
4F	GND_WLED	Ground	Ground for WLED Currents
4E	IFLASH	Input	High Current Flash Current Set Resistor
4D	SYNC_PWM	Logic Input	External PWM Control for LEDs or External Clock for RGB Sync
4C	ADDR_SEL	Logic Input	Address Select (I^2C)
4B	NRST	Logic Input	Reset Pin
4A	R2	Output	Red LED 2 Output
3F	WLED5	Output	White LED 5 Output
3E	WLED6	Output	White LED 6 Output
3D	V_{DD1}	Power	Supply Voltage
3C	FLASH_EN	Logic Input	Enable for High Current Flash
3B	SCL	Logic Input	Clock (I^2C)
3A	G2	Output	Green LED 2 Output
2F	WLED3	Output	White LED 3 Output
2E	WLED4	Output	White LED 4 Output
2D	ASE	Input	Audio Synchronization Input
2C	IRT	Input	Oscillator Frequency Resistor
2B	GNDT	Ground	Ground
2A	B2	Output	Blue LED 2 Output
1F	WLED1	Output	White LED 1 Output
1E	WLED2	Output	White LED 2 Output
1D	GNDA	Ground	Ground for Analog Circuitry
1C	VREF	Output	Reference Voltage
1B	V_{DDA}	Power	Internal LDO Output
1A	V_{DD2}	Power	Supply Voltage

Copyright © 2007–2013, Texas Instruments Incorporated

These devices have limited built-in ESD protection. The leads should be shorted together or the device placed in conductive foam during storage or handling to prevent electrostatic damage to the MOS gates.

Absolute Maximum Ratings[1] [2][3]

V (SW, FB, R1-2, G1-2, B1-2, FLASH, WLED1-6)[4] [5]		-0.3V to +7.2V
V_{DD1}, V_{DD2}, V_{DDIO}, V_{DDA}		-0.3V to +6.0V
Voltage on ASE, IRT, IFLASH, IRGB, VREF		-0.3V to V_{DD1}+0.3V with 6.0V max
Voltage on Logic Pins		-0.3V to V_{DDIO} +0.3V with 6.0V max
V(all other pins): Voltage to GND		-0.3V to 6.0V
I (V_{REF})		10 µA
I(R1, G1, B1, R2, G2, B2)		100 mA
I(FLASH)[6]		400 mA
Continuous Power Dissipation[7]		Internally Limited
Junction Temperature (T_{J-MAX})		150°C
Storage Temperature Range		-65°C to +150°C
Maximum Lead Temperature (Soldering) [8]		260°C
ESD Rating	Human Body Model[9]	2 kV

(1) Absolute Maximum Ratings indicate limits beyond which damage to the component may occur. Operating Ratings are conditions under which operation of the device is ensured. Operating Ratings do not imply performance limits. For performance limits and associated test conditions, see the Electrical Characteristics tables.
(2) All voltages are with respect to the potential at the GND pins.
(3) If Military/Aerospace specified devices are required, please contact the TI Sales Office/Distributors for availability and specifications.
(4) Battery/Charger voltage should be above 6V no more than 10% of the operational lifetime.
(5) Voltage tolerance of LP39542 above 6.0V relies on fact that V_{DD1} and V_{DD2} (2.8V) are available (ON) at all conditions. If V_{DD1} and V_{DD2} are not available (ON) at all conditions, Texas Instuments does not ensure any parameters or reliability for this device.
(6) The total load current of the boost converter in worst-case conditions is limited to 300 mA (min. input and max. output voltage).
(7) Internal thermal shutdown circuitry protects the device from permanent damage. Thermal shutdown engages at T_J=160°C (typ.) and disengages at T_J=140°C (typ.).
(8) For detailed soldering specifications and information, see Application Note AN-1112 : DSBGA Wafer Level Chip Scale Package SNVA009or Application Note AN-1412: Micro DSBGA Wafer Lever Chip Scale Package SNVA131
(9) The Human body model is a 100 pF capacitor discharged through a 1.5 kΩ resistor into each pin.

Operating Ratings [1] [2]

V (SW, FB, WLED1-6, R1-2, G1-2, B1-2, FLASH)	0 to 6.0V
$V_{DD1,2}$ with external LDO	2.7 to 5.5V
$V_{DD1,2}$ with internal LDO	3.0 to 5.5V
V_{DDA}	2.7 to 2.9V
V_{DDIO}	1.65V to V_{DD1}
Voltage on ASE	0.1V to V_{DDA} –0.1V
Recommended Load Current	0 mA to 400 mA
Junction Temperature (T_J)	-30°C to +125°C
Ambient Temperature (T_A)[3]	-30°C to +85°C

(1) Absolute Maximum Ratings indicate limits beyond which damage to the component may occur. Operating Ratings are conditions under which operation of the device is ensured. Operating Ratings do not imply performance limits. For performance limits and associated test conditions, see the Electrical Characteristics tables.
(2) All voltages are with respect to the potential at the GND pins.
(3) In applications where high power dissipation and/or poor package thermal resistance is present, the maximum ambient temperature may have to be derated. Maximum ambient temperature (T_{A-MAX}) is dependent on the maximum operating junction temperature ($T_{J-MAX-OP}$ = 125°C), the maximum power dissipation of the device in the application (P_{D-MAX}), and the junction-to ambient thermal resistance of the part/package in the application (θ_{JA}), as given by the following equation: $T_{A-MAX} = T_{J-MAX-OP} – (\theta_{JA} \times P_{D-MAX})$.

Thermal Properties

Junction-to-Ambient Thermal Resistance(θ_{JA})[1]	60°C/W

(1) Junction-to-ambient thermal resistance is highly application and board-layout dependent. In applications where high maximum power dissipation exists, special care must be paid to thermal dissipation issues in board design.

Copyright © 2007–2013, Texas Instruments Incorporated

Electrical Characteristics [1] [2]

Limits in standard typeface are for T_J = 25°C. Limits in **boldface** type apply over the operating ambient temperature range (-30°C < T_A < +85°C). Unless otherwise noted, specifications apply to the LP39542 Block Diagram with: V_{DD1} = V_{DD2} = 3.6V, V_{DDIO} = 2.8V, C_{VDD} = C_{VDDIO} = 100 nF, C_{OUT} = C_{IN} = 10 µF, C_{VDDA} = 1 µF, C_{REF} = 100 nF, L_1 = 4.7 µH, R_{FLASH} = 910Ω, R_{RGB} = 5.6 kΩ and R_{RT} = 82 kΩ [3].

Symbol	Parameter	Test Conditions	Min	Typ	Max	Unit
I_{VDD}	Standby supply current (V_{DD1} + V_{DD2})	NSTBY (bit) = L, NRST (pin) = H SCL=H, SDA = H		1	**8**	µA
	No-boost supply current (V_{DD1} + V_{DD2})	NSTBY (bit) = H, EN_BOOST(bit) = L SCL = H, SDA = H Audio sync and LEDs OFF			**450**	µA
	No-load supply current (V_{DD1} + V_{DD2})	NSTBY (bit) = H, EN_BOOST (bit) = H SCL = H, SDA = H Audio sync and LEDs OFF Autoload OFF			**1**	mA
	RGB drivers (V_{DD1} + V_{DD2})	CC mode at R1, G1, B1 and R2, G2, B2 set to 15 mA		150		µA
		SW mode		150		
	WLED drivers (V_{DD1} + V_{DD2})	4+2 banks I_{OUT} = 25.5 mA per LED		500		µA
	Audio synchronization (V_{DD1} + V_{DD2})	Audio sync ON				µA
		$V_{DD1,2}$ = 2.8V		390		
		$V_{DD1,2}$ = 3.6V		700		
	Flash (V_{DD1} + V_{DD2})	I(R_{FLASH}) = 1 mA Peak current during flash		2		mA
I_{VDDIO}	V_{DDIO} standby supply current	NSTBY (bit)=L SCL = H, SDA = H			**1**	µA
I_{EXT_LDO}	External LDO output current (V_{DD1}, V_{DD2}, V_{DDA})	7V tolerant application only I_{BOOST} = 300 mA			**6.5**	mA
V_{DDA}	Output voltage of internal LDO for analog parts	See [4]	**2.72**	2.80	**2.88**	V
			-3		**+3**	%

(1) All voltages are with respect to the potential at the GND pins.
(2) Min and Max limits are specified by design, test, or statistical analysis. Typical numbers represent the most likely norm.
(3) Low-ESR Surface-Mount Ceramic Capacitors (MLCCs) used in setting electrical characteristics.
(4) V_{DDA} output is not recommended for external use.

Copyright © 2007–2013, Texas Instruments Incorporated

BLOCK DIAGRAM

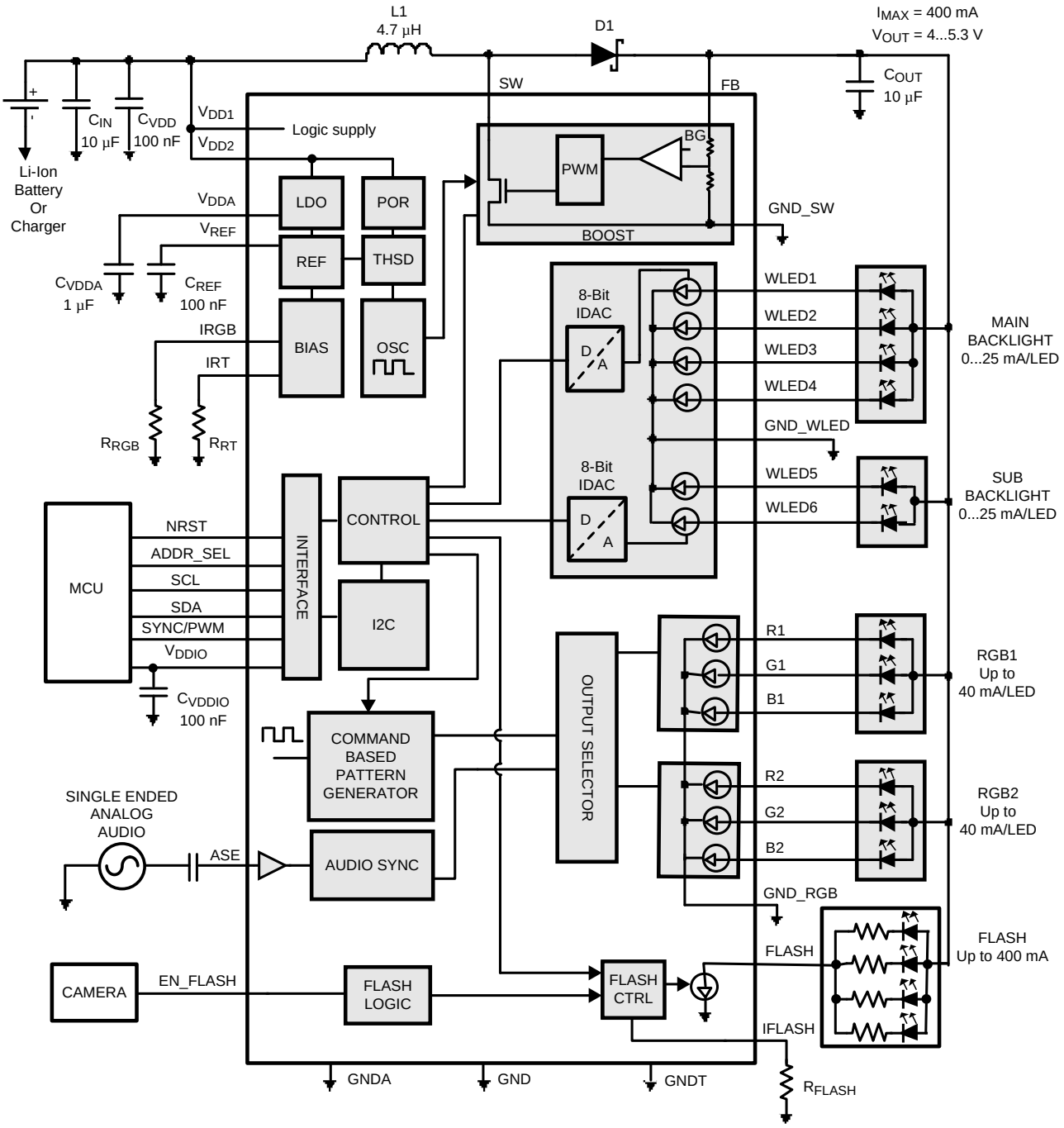

DETAILED DESCRIPTION

Modes of Operation

RESET: In the RESET mode all the internal registers are reset to the default values and the chip goes to STANDBY mode after reset. NSTBY control bit is low after reset by default. Reset is active always if NRST input pin is low or internal Power On Reset is active. LP39542 can be also reset by writing any data to Reset Register in address 60H. Power On Reset (POR) will activate during the chip startup or when the supply voltage V_{DD2} falls below 1.5V. Once V_{DD2} rises above 1.5V, POR will inactivate and the chip will continue to the STANDBY mode.

STANDBY: The STANDBY mode is entered if the register bit NSTBY is LOW. This is the low power consumption mode, when all circuit functions are disabled. Registers can be written in this mode and the control bits are effective immediately after power up.

STARTUP: When NSTBY bit is written high, the INTERNAL STARTUP SEQUENCE powers up all the needed internal blocks (Vref, Bias, Oscillator etc..). To ensure the correct oscillator initialization, a 10 ms delay is generated by the internal state-machine. If the chip temperature rises too high, the Thermal Shutdown (TSD) disables the chip operation and STARTUP mode is entered until no thermal shutdown event is present.

BOOST STARTUP: Soft start for boost output is generated in the BOOST STARTUP mode. The boost output is raised in PFM mode during the 10 ms delay generated by the state-machine. The Boost startup is entered from Internal Startup Sequence if EN_BOOST is HIGH or from Normal mode when EN_BOOST is written HIGH. During the 10 ms Boost Startup time all LED outputs are switched off to ensure smooth start-up.

NORMAL: During NORMAL mode the user controls the chip using the Control Registers. The registers can be written in any sequence and any number of bits can be altered in a register in one write

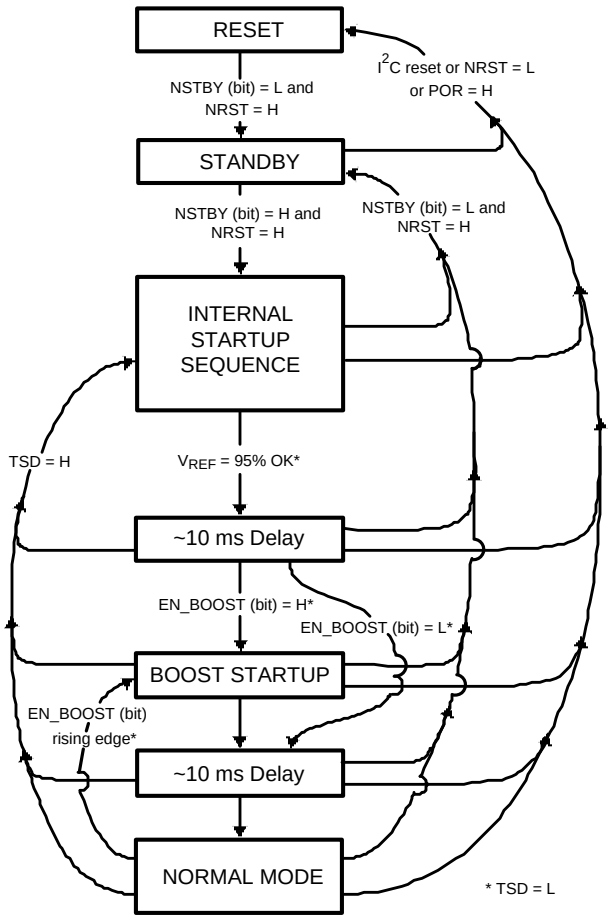

Copyright © 2007–2013, Texas Instruments Incorporated

Magnetic Boost DC/DC Converter

The LP39542 Boost DC/DC Converter generates a 4.0 – 5.3V voltage for the LEDs from single Li-Ion battery (3V…4.5V). The output voltage is controlled with an 8-bit register in 9 steps. The converter is a magnetic switching PWM mode DC/DC converter with a current limit. The converter has three options for switching frequency, 1 MHz, 1.67 MHz and 2 MHz (default), when timing resistor RT is 82 kΩ. Timing resistor defines the internal oscillator frequency and thus directly affects boost frequency and all circuit's internally generated timing (RGB, Flash, WLED fading).

The LP39542 Boost Converter uses pulse-skipping elimination to stabilize the noise spectrum. Even with light load or no load a minimum length current pulse is fed to the inductor. An active load is used to remove the excess charge from the output capacitor at very light loads. At very light load and when input and output voltages are very close to each other, the pulse skipping is not completely eliminated. Output voltage should be at least 0.5V higher than input voltage to avoid pulse skipping. Reducing the switching frequency will also reduce the required voltage difference.

Active load can be disabled with the en_autoload bit. Disabling will increase the efficiency at light loads, but the downside is that pulse skipping will occur. The Boost Converter should be stopped when there is no load to minimise the current consumption.

The topology of the magnetic boost converter is called CPM control, current programmed mode, where the inductor current is measured and controlled with the feedback. The user can program the output voltage of the boost converter. The output voltage control changes the resistor divider in the feedback loop.

Figure 1 shows the boost topology with the protection circuitry. Four different protection schemes are implemented:

1. Over voltage protection, limits the maximum output voltage
   - Keeps the output below breakdown voltage.
   - Prevents boost operation if battery voltage is much higher than desired output.
2. Over current protection, limits the maximum inductor current
   - Voltage over switching NMOS is monitored; too high voltages turn the switch off.
3. Feedback break protection. Prevents uncontrolled operation if FB pin gets disconnected.
4. Duty cycle limiting, done with digital control.

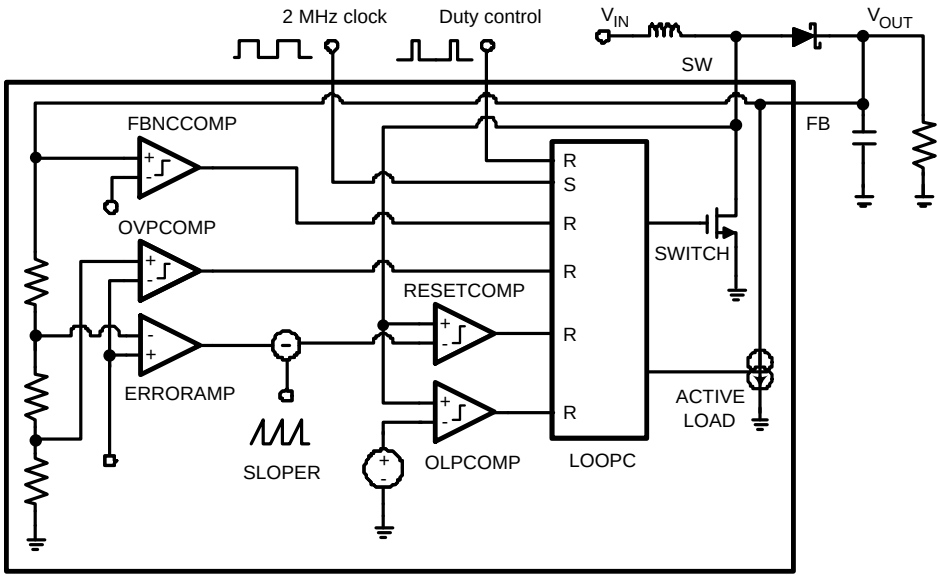

Figure 1. Boost Converter Topology

Magnetic Boost DC/DC Converter Electrical Characteristics

Symbol	Parameter	Test Conditions	Min	Typ	Max	Unit
I_{LOAD}	Load Current	3.0V ≤ V_{IN} V_{OUT} = 5V	0		300	mA
		3.0V ≤ V_{IN} V_{OUT} = 4V	0		400	
V_{OUT}	Output Voltage Accuracy (FB Pin)	3.0V ≤ V_{IN} ≤ V_{OUT} - 0.5 V_{OUT} = 5.0V	**−5**		**+5**	%
	Output Voltage (FB Pin)	1 mA ≤ I_{LOAD} ≤ 300 mA V_{IN} > 5V + $V_{(SCHOTTKY)}$		V_{IN}–$V_{(SCHOTTKY)}$		V
RDS_{ON}	Switch ON Resistance	$V_{DD1,2}$ = 2.8V, I_{SW} = 0.5A		0.4	**0.8**	Ω
f_{boost}	PWM Mode Switching Frequency	RT = 82 kΩ freq_sel[2:0] = 1XX		2		MHz
	Frequency Accuracy	2.7 ≤ VDDA ≤ 2.9	−6	±3	+6	%
		RT = 82 kΩ	**−9**		**+9**	
t_{PULSE}	Switch Pulse Minimum Width	no load		25		ns
$t_{STARTUP}$	Startup Time	Boost startup from STANDBY		10		ms
I_{SW_MAX}	SW Pin Current Limit		700	800	900	mA
			550		**950**	

BOOST STANDBY MODE

User can stop the Boost Converter operation by writing the Enables register bit EN_BOOST low. When EN_BOOST is written high, the converter starts for 10 ms in PFM mode and then goes to PWM mode.

BOOST OUTPUT VOLTAGE CONTROL

User can control the boost output voltage by boost output 8-bit register.

Boost Output [7:0] Register 0DH		Boost Output Voltage (typical)
Bin	**Hex**	
0000 0000	00	4.00
0000 0001	01	4.25
0000 0011	03	4.40
0000 0111	07	4.55
0000 1111	0F	4.70
0001 1111	1F	4.85
0011 1111	**3F**	**5.00 Default**
0111 1111	7F	5.15
1111 1111	FF	5.30

Copyright © 2007–2013, Texas Instruments Incorporated

Figure 2. Boost Output Voltage Control

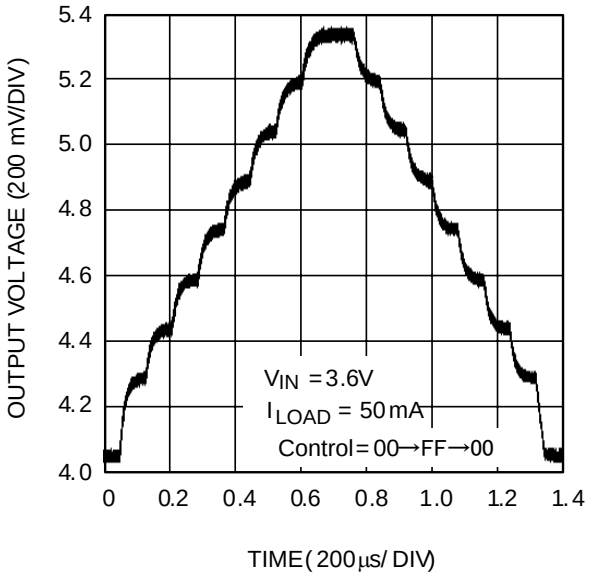

BOOST FREQUENCY CONTROL

freq_sel[2:0][(1)]	frequency
1XX	2.00 MHz
01X	1.67 MHz
001	1.00 MHz

(1) Register 'boost freq' (address 0EH). Register default value after reset is 07H.

Boost Converter Typical Performance Characteristics

Vin = 3.6V, Vout = 5.0V if not otherwise stated

Boost Converter Efficiency

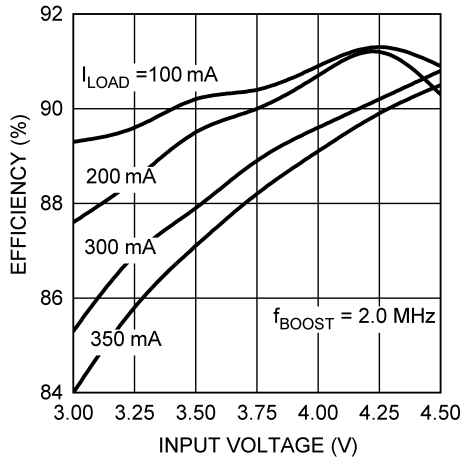

Boost Typical Waveforms at 100mA Load

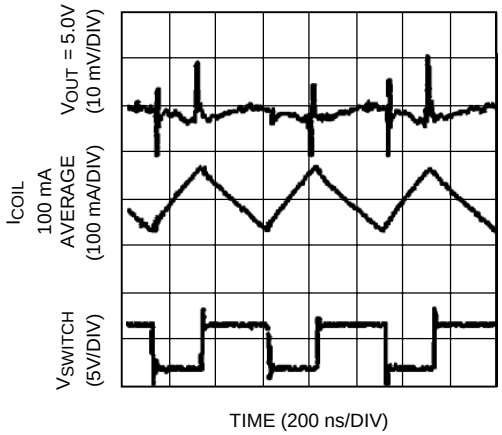

Vin = 3.6V, Vout = 5.0V if not otherwise stated

Battery Current vs Voltage

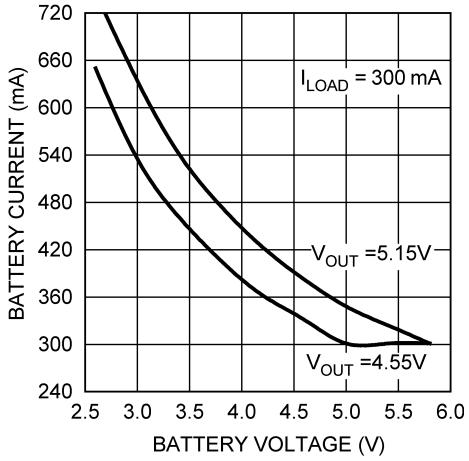

Battery Current vs Voltage

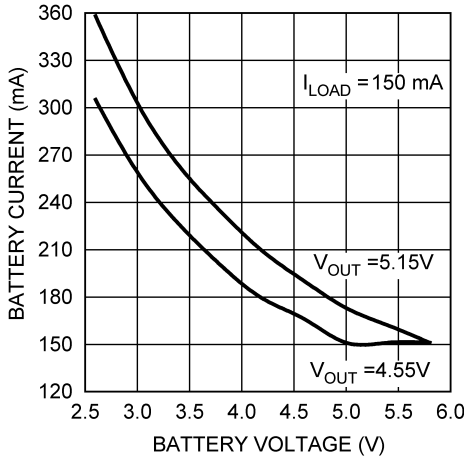

Boost Line Regulation

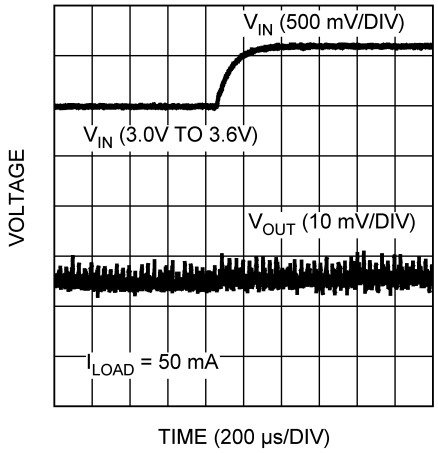

Boost Startup with No Load

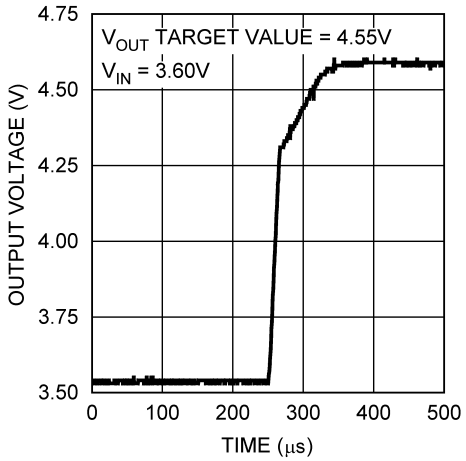

Boost Load Transient, 50 mA–100 mA

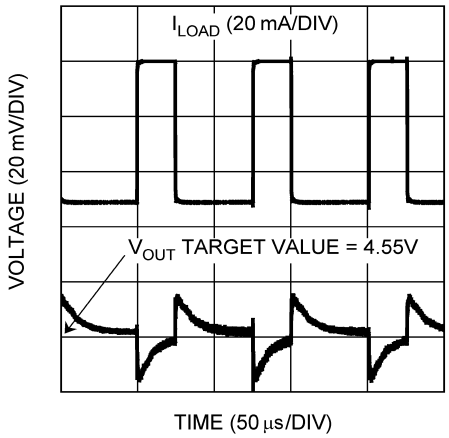

Boost Switching Frequency

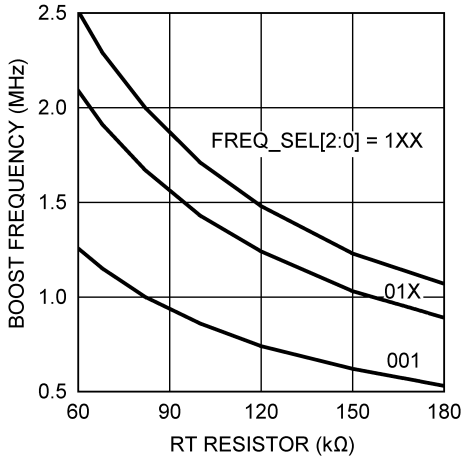

Copyright © 2007–2013, Texas Instruments Incorporated

Vin = 3.6V, Vout = 5.0V if not otherwise stated

Output Voltage vs Load Current

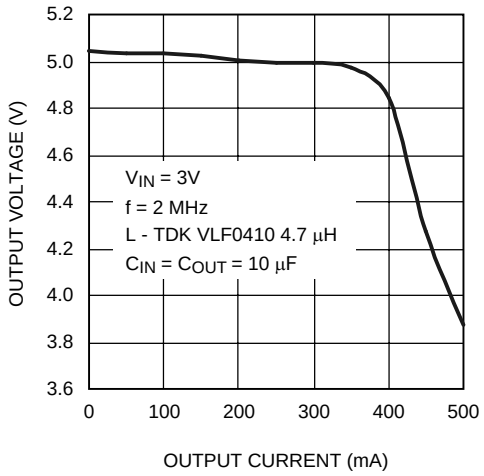

Efficiency at Low Load vs Autoload

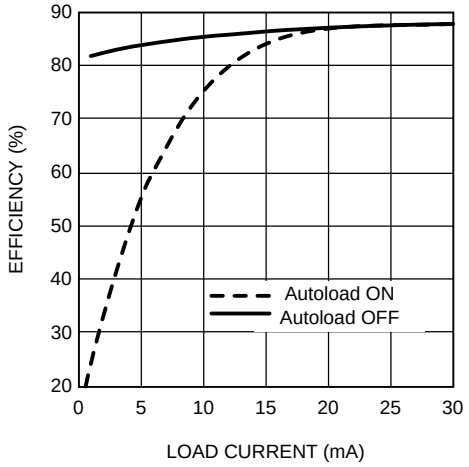

Functionality of Color LED Outputs (R1, G1, B1; R2, G2, B2)

LP39542 has 2 sets of RGB/color LED outputs. Both sets have 3 outputs and the sets can be controlled in 4 different ways:

1. Command based pattern generator control (internal PWM)
2. Audio synchronization control
3. Programmable ON/OFF blinking sequences for RGB1
4. External PWM control

By using **command based pattern generator** user can program any kind of color effect patterns. LED intensity, blinking cycles and slopes are independently controlled with 8 16-bit commands. Also real time commands are possible as well as loops and step by step control. If analog audio is available on system, the user can use **audio synchronization** for synchronizing LED blinking to the music. The different modes together with the various sub modes generate very colorful and interesting lighting effects. **Direct ON/OFF** control is mainly for switching on and off LEDs. **External PWM control** is for applications where external PWM signal is available and required to control the color LEDs. PWM signal can be connected to any color LED separately as shown later.

COLOR LED CONTROL MODE SELECTION

The RGB_SEL[1:0] bits in the Enables register (08H) control the output modes for RGB1 (R1, G1, B1) and RGB2 (R2, G2, B2) outputs as seen in the following table.

RGB_SEL[1:0]	Audio sync	Pattern generator	Blinking control
00	-	RGB1 & RGB2	-
01	-	RGB2	RGB1
10	RGB2	RGB1	-
11	RGB1 & RGB2	-	-

RGB Control register (00H) has control bits for direct on/off control of all color LEDs. Note that the LEDs have to be turned on in order to control them with audio synchronization or pattern generator.

The external PWM signal can control any LED depending on the control register setup. External PWM signal is connected to PWM/SYNC pin. The controls are in the Ext. PWM Control register (address 07H) except the FLASH control in HC_Flash (10H) register as follows:

Ext. PWM Control (07H)(1)		
wled1-4_pwm	bit 7	PWM controls WLED 1-4
wled5-6_pwm	bit 6	PWM controls WLED 5-6
r1_pwm	bit 5	PWM controls R1 output
g1_pwm	bit 4	PWM controls G1 output
b1_pwm	bit 3	PWM controls B1 output
r2_pwm	bit 2	PWM controls R2 output
g2_pwm	bit 1	PWM controls G2 output
b2_pwm	bit 0	PWM controls B2 output
HC_Flash (10H)		
hc_pwm	bit 5	PWM controls FLASH

(1) **Note:** If DISPL=1, wled1-4pwm controls WLED1-6
Note: Maximum external PWM frequency is 1kHz. If during the external PWM control the internal PWM is on, the result will be product of both functions.

CURRENT CONTROL OF COLOR LED OUTPUTS (R1, R2, G1, G2, B1, B2)

Both RGB output sets can be separately controlled as constant current sinks or as switches. This is done using cc_rgb1/2 bits in the RGB control register. In constant current mode one or both RGB output sets are controlled with constant current sinks (no external ballast resistors required). The maximum output current for both drivers is set by one external resistor R_{RGB}. User can decrease the maximum current for an individual LED driver by programming as shown later.

The maximum current for all RGB drivers is set with R_{RGB}. The equation for calculating the maximum current is

$$I_{MAX} = 100 \times 1.23V / (R_{RGB} + 50\Omega) \quad (1)$$

where

I_{MAX} - maximum RGB current in any RGB output in constant current mode

1.23V - reference voltage

100 - internal current mirror multiplier

R_{RGB}- resistor value in Ohms

50Ω - internal resistor in the I_{RGB} input

For example if 22mA is required for maximum RGB current R_{RGB} equals to

$$R_{RGB}=100\times1.23V / I_{MAX}–50\Omega=123V / 0.022A–50\Omega=\mathbf{5.54k\Omega} \quad (2)$$

Each individual RGB output has a separate maximum current programming. The control bits are in registers **RGB1 max current** and **RGB2 max current** (12H and 13H) and programming is shown in table below. The default value after reset is 00b.

IR1[1:0], IG1[1:0], IB1[1:0], IR2[1:0], IG2[1:0], IB2[1:0]	Maximum current/output
00	0.25 × I_{MAX}
01	0.50 × I_{MAX}
10	0.75 × I_{MAX}
11	1.00 × I_{MAX}

SWITCH MODE

The switch mode is used if there is a need to connect parallel LEDs to output or if the RGB output current needs to be increased.

Please note that the switch mode **requires an external ballast resistors** at each output to limit the LED current.

The switch/current mode and on/off controls for RGB are in the RGB_ctrl register (00H).

 Copyright © 2007–2013, Texas Instruments Incorporated

Table 1. RGB_ctrl register (00H)

CC_RGB1	bit7	1	R1, G1 and B1 are switches → limit current with ballast resistor
		0	R1, G1 and B1 are constant current sinks, current limited internally
CC_RGB2	bit6	1	R2, G2 and B2 are switches → limit current with ballast resistor
		0	R2, G2 and B2 are constant current sinks, current limited internally
r1sw	bit5	1	R1 is on
		0	R1 is off
g1sw	bit4	1	G1 is on
		0	G1 is off
b1sw	bit3	1	B1 is on
		0	B1 is off
r2sw	bit2	1	R2 is on
		0	R2 is off
g2sw	bit1	1	G2 is on
		0	G2 is off
b2sw	bit0	1	B2 is on
		0	B2 is off

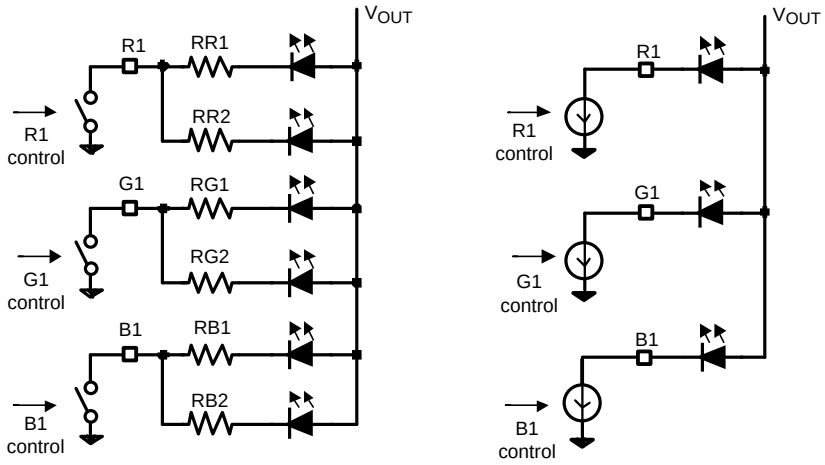

RGB1 output as switch (SW)

RGB1 output as a constant current sink (CC)

Command Based Pattern Generator for Color LEDs

The LP39542 has an unique stand-alone command based pattern generator with 8 user controllable 16-bit commands. Since registers are 8-bit long one command requires 2 write cycles. Each command has intensity level for each LED, command execution time (CET) and transition time (TT) as seen in Figure 3.

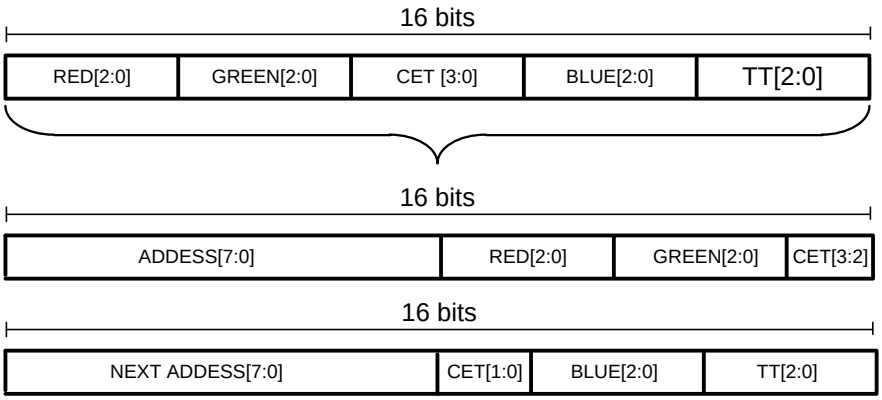

Figure 3.

COMMAND REGISTER WITH 8 COMMANDS

COMMAND 1	ADDRESS 50H	R2	R1	R0	G2	G1	G0	CET3	CET2
	ADDRESS 51H	CET1	CET0	B2	B1	B0	TT2	TT1	TT0
COMMAND 2	ADDRESS 52H	R2	R1	R0	G2	G1	G0	CET3	CET2
	ADDRESS 53H	CET1	CET0	B2	B1	B0	TT2	TT1	TT0
COMMAND 3	ADDRESS 54H	R2	R1	R0	G2	G1	G0	CET3	CET2
	ADDRESS 55H	CET1	CET0	B2	B1	B0	TT2	TT1	TT0
COMMAND 4	ADDRESS 56H	R2	R1	R0	G2	G1	G0	CET3	CET2
	ADDRESS 57H	CET1	CET0	B2	B1	B0	TT2	TT1	TT0
COMMAND 5	ADDRESS 58H	R2	R1	R0	G2	G1	G0	CET3	CET2
	ADDRESS 59H	CET1	CET0	B2	B1	B0	TT2	TT1	TT0
COMMAND 6	ADDRESS 5AH	R2	R1	R0	G2	G1	G0	CET3	CET2
	ADDRESS 5BH	CET1	CET0	B2	B1	B0	TT2	TT1	TT0
COMMAND 7	ADDRESS 5CH	R2	R1	R0	G2	G1	G0	CET3	CET2
	ADDRESS 5DH	CET1	CET0	B2	B1	B0	TT2	TT1	TT0
COMMAND 8	ADDRESS 5EH	R2	R1	R0	G2	G1	G0	CET3	CET2
	ADDRESS 5FH	CET1	CET0	B2	B1	B0	TT2	TT1	TT0

COLOR INTENSITY CONTROL

Each color has 3-bit intensity level. Level control is logarithmic, 2 curves are selectable. The LOG bit in register 11H defines the curve used as seen in the following table.

R[2:0], G[2:0], B[2:0]	**CURRENT [% × $I_{MAX(COLOR)}$]**	
	LOG=0	**LOG=1**
000	0	0
001	7	1
010	14	2
011	21	4
100	32	10
101	46	21
110	71	46
111	100	100

Copyright © 2007–2013, Texas Instruments Incorporated

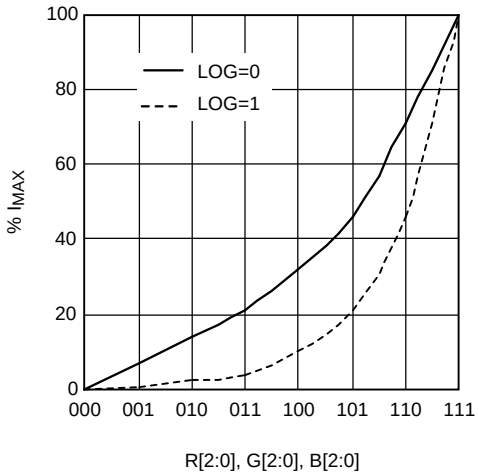

COMMAND EXECUTION TIME (CET) AND TRANSITION TIME (TT)

The command execution CET time is the duration of one single command. Command execution times CET are defined as follows, when R_T=82kΩ:

CET [3:0]	CET duration, ms
0000	197
0001	393
0010	590
0011	786
0100	983
0101	1180
0110	1376
0111	1573
1000	1769
1001	1966
1010	2163
1011	2359
1100	2556
1101	2753
1110	2949
1111	3146

Transition time TT is duration of transition from the previous RGB value to programmed new value. Transition times TT are defined as follows:

TT [2:0]	Transition time, ms
000	0
001	55
010	110
011	221
100	442
101	885
110	1770
111	3539

Copyright © 2007–2013, Texas Instruments Incorporated

Figure 4 shows an example of RGB CET and TT times.

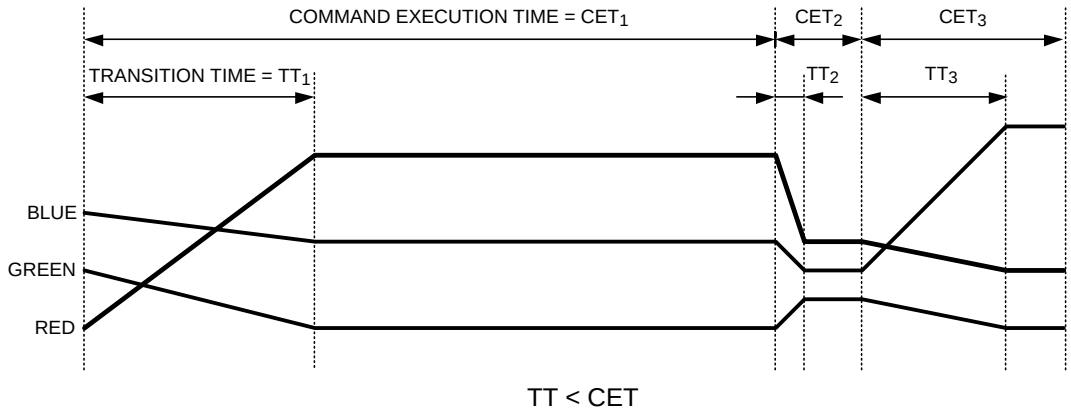

Figure 4.

The command execution time also may be less than the transition time – Figure 5 illuminates this case.

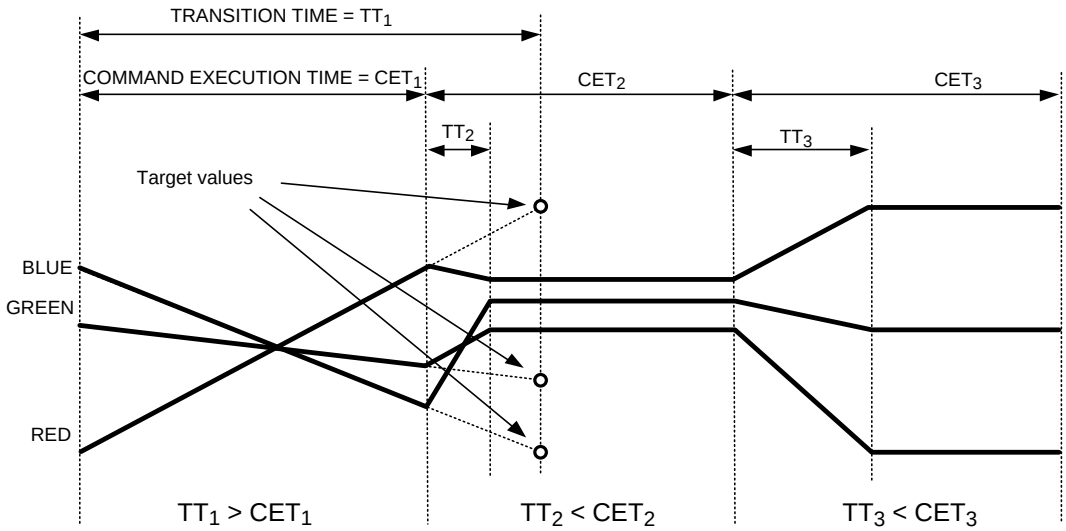

Figure 5.

LOOP CONTROL

Pattern generator commands can be looped using the LOOP bit (D1) in Pattern gen ctrl register (11H). If LOOP=1 the program will be looped from the command 8 register or if there is 0000 0000 and 0000 0000 in one command register. The loop will start from command 1 and continue until stopped by writing rgb_start=0 or loop=0. The example of loop is shown in Figure 6.

Copyright © 2007–2013, Texas Instruments Incorporated

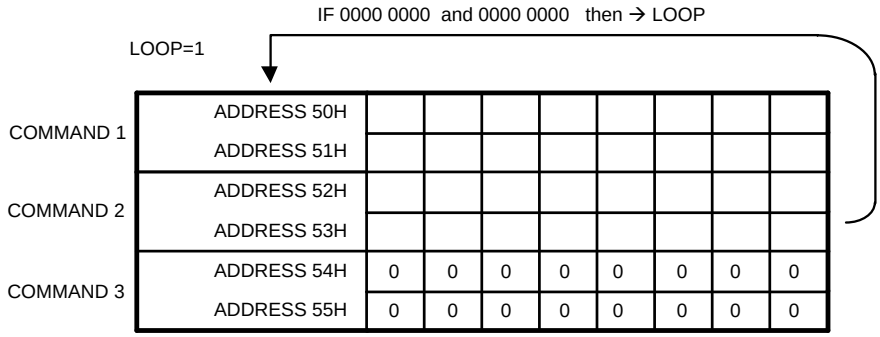

Figure 6.

SINGLE PROGRAM

If control bit LOOP=0 the program will start from Command 1 and run to either last command or to empty "0000 0000 / 0000 0000" command.

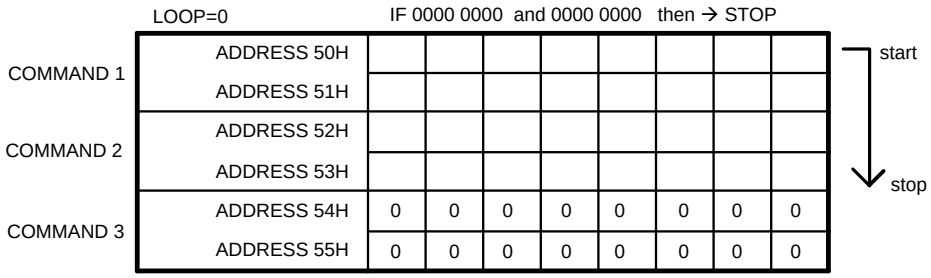

Figure 7.

The LEDs maintain the brightness of the last command when the single program stops. Changes in command register will not be effective in this phase. The RGB_START bit has to be toggled off and on to make changes effective.

START BIT

Pattern_gen_ctrl register's RGB_START bit will enable command execution starting from Command 1.

Pattern gen ctrl register (11H)		
rgb_start	Bit 2	0 – Pattern generator disabled 1 – execution pattern starting from command 1
loop	Bit 1	0 – pattern generator loop disabled (single pattern) 1 – pattern generator loop enabled (execute until stopped)
log	Bit 0	0 – color intensity mode 0 1 – color intensity mode 1

Audio Synchronization

The color LEDs connected to RGB outputs can be synchronized to incoming audio with Audio Synchronization feature. Audio Sync has 2 modes. **Amplitude mode** synchronizes color LEDs based on input signal's peak amplitude. In the amplitude mode the user can select between 3 different amplitude mapping modes and 4 different speed configurations. The **frequency mode** synchronizes the color LEDs based on bass, middle and treble amplitudes (= low pass, band pass and high pass filters). User can select between 2 different frequency responses and 4 different speed configurations for best audio-visual user experience. Programmable gain and AGC function are also available for adjustment of input signal amplitude to light response. The Audio Sync functionality is described more closely below.

Copyright © 2007–2013, Texas Instruments Incorporated

USING A DIGITAL PWM AUDIO SIGNAL AS AN AUDIO SYNCHRONIZATION SOURCE

If the input signal is a PWM signal, use a first or second order low pass filter to convert the digital PWM audio signal into an analog waveform. There are two parameters that need to be known to get the filter to work successfully: frequency of the PWM signal and the voltage level of the PWM signal. Suggested cut-off frequency (-3 dB) should be around 2 kHz to 4 kHz and the stop-band attenuation at sampling frequency should be around -48 dB or better. Use a resistor divider to reduce the digital signal amplitude to meet the specification of the analog audio input. Because a low-order low-pass filter attenuates the high-frequency components from audio signal, MODE_CTRL=01b selection is recommended when frequency synchronization mode is enabled. Application example 5 shows an example of a second order RC-filter for 29 kHz PWM signal with 3.3V amplitude. Active filters, such as a Sallen-Key filter, may also be applied. An active filter gives better stop-band attenuation and cut-off frequency can be higher than for a RC-filter.

To make sure that the filter rolls off sufficiently quickly, connect your filter circuit to the audio input(s), turn on the audio synchronization feature, set manual gain to maximum, apply the PWM signal to the filter input and keep an eye on LEDs. If they are blinking without an audio signal (modulation), a sharper roll-off after the cut-off frequency, more stop-band attenuation, or smaller amplitude of the PWM signal is required.

AUDIO SYNCHRONIZATION SIGNAL PATH

LP39542 audio synchronization is mainly done digitally and it consists of the following signal path blocks:

- Input Buffers
- AD Converter
- DC Remover
- Automatic Gain Control (AGC)
- Programmable Gain
- 3 Band Digital Filter
- Peak Detector
- Look-up Tables (LUT)
- Mode Selector
- Integrators
- PWM Generator
- Output Drivers

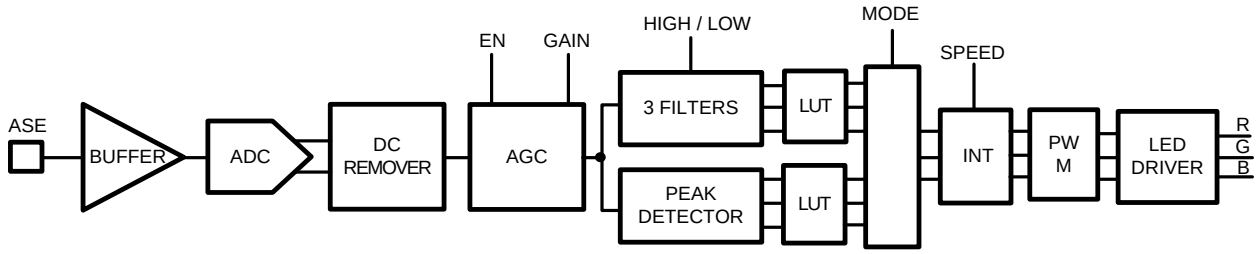

Figure 8.

The digitized input signal has DC component that is removed by digital **DC REMOVER** (-3 dB @ 400 Hz). Since the light response of input audio signal is very much amplitude dependent the AGC adjusts the input signal to suitable range automatically. User can disable **AGC** and the gain can be set manually with **PROGRAMMABLE GAIN**. LP39542 has 2 audio synchronization modes: amplitude and frequency. For amplitude based synchronization the **PEAK DETECTION** method is used. For frequency based synchronization **3 BAND FILTER** separates high pass, low pass and band bass signals. For both modes the predefined LUT is used to optimize the audio visual effect. **MODE SELECTOR** selects the synchronization mode. Different response times to music beat can be selected using **INTEGRATOR** speed variables. Finally **PWM GENERATOR** sets the driver FET duty cycles.

Copyright © 2007–2013, Texas Instruments Incorporated

INPUT SIGNAL TYPE AND BUFFERING

LP39542 supports single ended audio input as shown in Figure 9. The electric parameters of the buffer are described in the Audio Synch table. The buffer is rail-to-rail input operational amplifier connected as a voltage follower. DC level of the input signal is set by a simple resistor divider

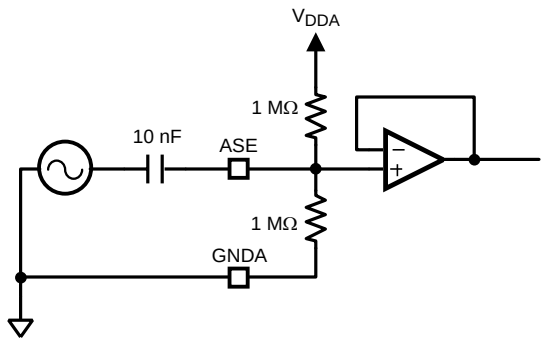

Figure 9.

AUDIO SYNCHRONIZATION ELECTRICAL PARAMETERS

Symbol	Parameter	Conditions	Min	Typical	Max	Unit
Z_{IN}	Input Impedance of ASE		**250**	500		kΩ
A_{IN}	Audio Input Level Range (peak-to-peak)	Gain = 21 dB	**0.1**			V
		Gain = 0 dB			**V_{DDA}-0.1**	
f_{3dB}	Crossover Frequencies (-3 dB)					kHz
	Narrow Frequency Response	Low Pass		0.5		
		Band Pass		1.0 and 1.5		
		High Pass		2.0		
	Wide Frequency Response	Low Pass		1.0		
		Band Pass		2.0 and 3.0		
		High Pass		4.0		

CONTROL OF ADC AND AUDIO SYNCHRONIZATION

The following table describes the controls required for audio synchronization.

Audio_sync_CTRL1 (2AH)					
GAIN_SEL[2:0]	Bits 7-5	Input signal gain control. Range 0...21 dB, step 3 dB:			
		[000] = 0 dB (default)	[011] = 9 dB	[110] = 18 dB	
		[001] = 3 dB	[100] = 12 dB	[111] = 21 dB	
		[010] = 6 dB	[101] = 15 dB		
SYNC_MODE	Bit 4	Synchronization mode selector. SYNCMODE = 0 → Amplitude Mode (default) SYNCMODE = 1 → Frequency Mode			
EN_AGC	Bit 3	Automatic Gain Control enable 1 = enabled 0 = disabled (Gain Select enabled) (default)			
EN_SYNC	Bit 2	Audio synchronization enable 1 = Enabled Note : If AGC is enabled, AGC gain starts from current GAIN_SEL gain value. 0 = Disabled (default)			
INPUT_SEL[1:0]	Bits 1-0	[00] = Single ended input signal, ASE. [01] = Temperature measurement [10] = Ambient light measurement [11] = No input (default)			

Copyright © 2007–2013, Texas Instruments Incorporated

Audio_sync_CTRL2 (2BH)		
EN_AVG	Bit 4	0 – averaging disabled (not applicable in audio sync mode) 1 – averaging enabled (not applicable in audio sync mode)
MODE_CTRL[1:0]	Bits 3-2	See below: Mode control
SPEED_CTRL[1:0]	Bits 1-0	Sets the LEDs light response time to audio input. [00] = FASTEST (default) [01] = FAST [10] = MEDIUM [11] = SLOW (For SLOW setting in amplitude mode f_{MAX}= 3.8 Hz, Frequency mode f_{MAX} = 7.6 Hz)

MODE CONTROL IN FREQUENCY MODE

Mode control has two setups based on audio synchronization mode select: the frequency mode and the amplitude mode. During the **frequency mode** user can select two filter options by MODE_CTRL as shown below. User can select the filters based on the music type and light effect requirements. In the first mode the frequency range extends to 8 kHz in the secont to 4 kHz.

The lowpass filter is used for the red, the bandpass filter for the blue and the hipass filter for the green LED.

Figure 10. Higher frequency mode MODE_CTRL = 00 and SYNC_MODE = 1

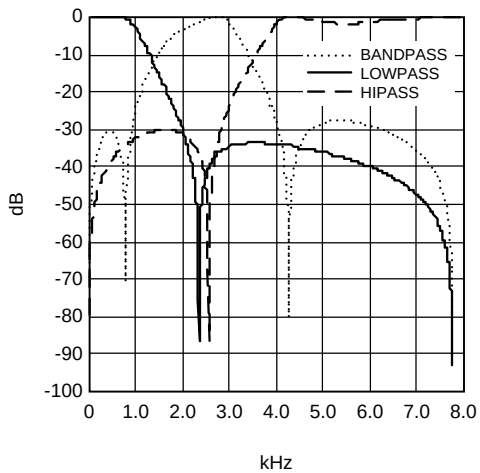

Figure 11. Lower frequency mode MODE_CTRL = 01 and SYNC_MODE = 1

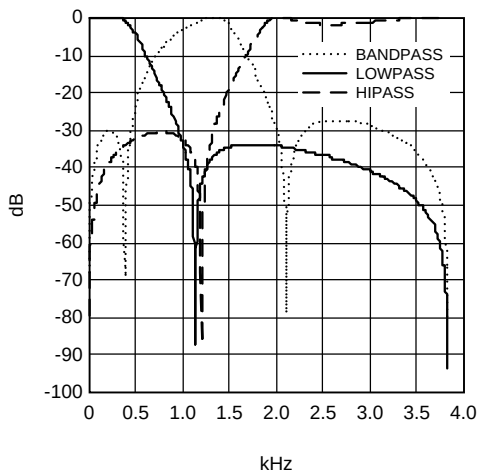

Copyright © 2007–2013, Texas Instruments Incorporated

MODE CONTROL IN AMPLITUDE MODE

During the **amplitude synchronization mode** user can select between three different amplitude mappings by using MODE_CTRL select. These three mapping options give different light response. The modes are presented in the following graphs.

Non-overlapping mode
MODE_CTRL[1:0] = [01]

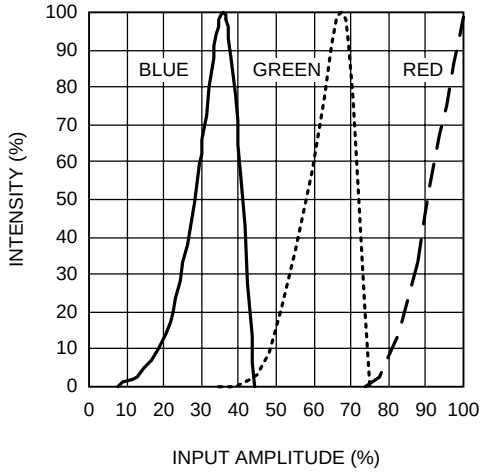

Partly overlapping mode
MODE_CTRL[1:0] = [00]

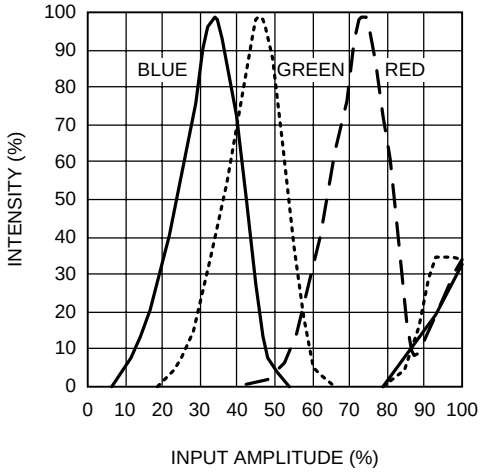

Overlapping mode
MODE_CTRL[1:0] = [10]

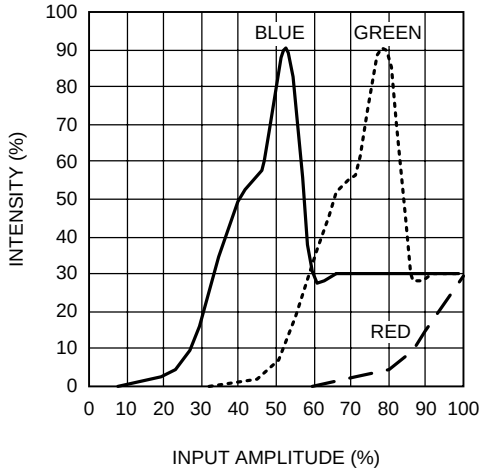

Peak Input Signal Level
Range vs Gain Setting

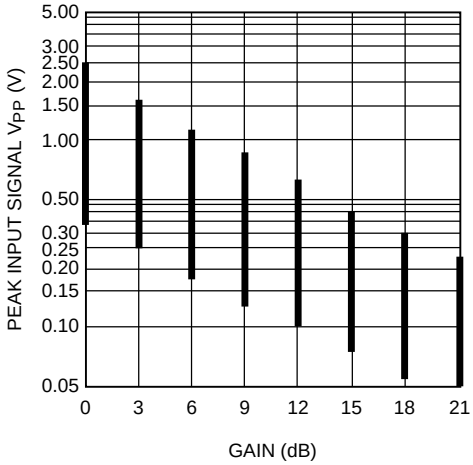

RGB Output Synchronization to External Clock

The RGB pattern generator and high current flash driver timing can be synchronized to external clock with following configuration.

1. Set PWM_SYNC bit in Enables register to 1
2. Feed SYNC/PWM pin with 5 MHz clock

By this the internal 5 MHz clock is disabled from pattern generator and flash timing circuitry.

The external clock signal frequency will fully determine the timings related to RGB and Flash.

Note: The boost converter will use internal 5 MHz clock even if the external clock is available.

Copyright © 2007–2013, Texas Instruments Incorporated

RGB LED Blinking Control

LP39542 has a possibility to drive indicator LEDs with RGB1 outputs with programmable blinking time. Blinking function is enabled with RGB_SEL[1:0] bits set as 01b in 0BH register. R1_CYCLE_EN, G1_CYCLE_EN and B1_CYCLE_EN bits in cycle registers (02H, 04H and 06H) enable/disable blinking function for corresponding output. When EN_BLINK bit is written high in register 11H, the blinking sequences for all outputs (which has CYCLE_EN bit enabled) starts simultaneously. EN_BLINK bit should be written high after selecting wanted blinking sequences and enabling CYCLE_EN bits, to synchronize outputs to get desired lighting effect. R1SW, G1SW and B1SW bits can be used to enable and disable outputs when wanted.

RGB1 blinking sequence is set with R1, G1 and B1 blink registers (01H, 03H and 05H) by setting the appropriate OFF-ON times. Blinking cycle times are set with R1_CYCLE[2:0], G1_CYCLE[2:0] and B1_CYCLE[2:0] bits in R1, G1 and B1 CYCLE registers (02H, 04H and 06H). OFF/ON time is a percentage of the selected cycle time. Values for setting OFF/ON time can be seen in following table.

Table 2. R1, G1, and B1 Blink Registers (01H, 03H and 05H)

Name	Bit	Description	
R1_ON[3:0], R1_OFF[3:0] G1_ON[3:0], G1_OFF[3:0] B1_ON[3:0], B1_OFF[3:0]	7-4, 3-0	RGB1 ON and OFF time	
		Bits	ON/OFF time
		0000	0%
		0001	1%
		0010	2.5%
		0011	5%
		0100	7.5%
		0101	10%
		0110	15%
		0111	20%
		1000	30%
		1001	40%
		1010	50%
		1011	60%
		1100	70%
		1101	80%
		1110	90%
		1111	100%

Blinking ON/OFF cycle is defined so that there will be first OFF-period then ON-period after which follows an off-period for the remaining cycle time that can not be set. If OFF and ON times are together more than 100% the first OFF time will be as set and the ON time is cut to meet 100%. For example, if 50% OFF time is set and ON time is set greater than 50%, only 50% ON time is used, the exceeding ON time is ignored. If OFF and ON times are together less than 100% the remaining cycle time output is OFF.

Copyright © 2007–2013, Texas Instruments Incorporated

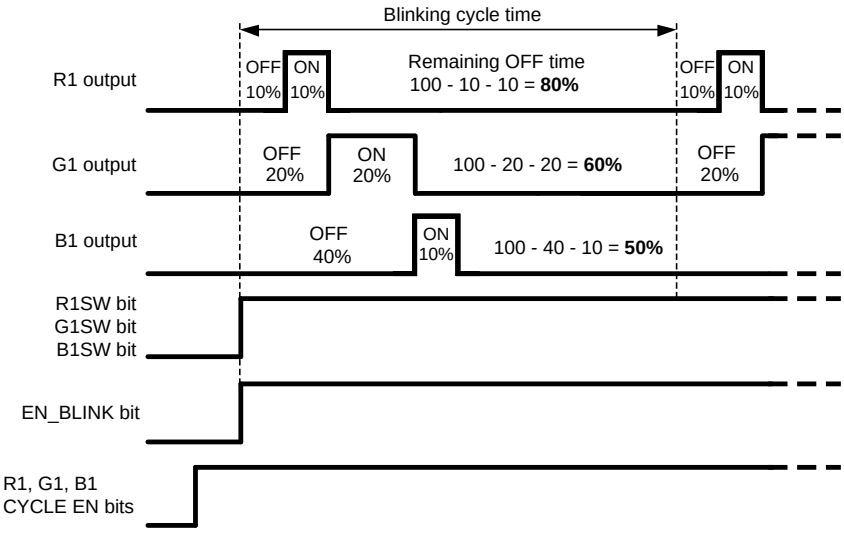

Values for setting the blinking cycle for RGB1 can be seen in following table:

Table 3. R1, G1 and B1 Cycle Registers (02H, 04H and 06H)

Name	Bit	Decription		
R1_CYCLE_EN **G1_CYCLE_EN** **B1_CYCLE_EN**	3	Blinking enable 0 = disabled 1 = enabled, output state is defined with blinking cycle		
R1_CYCLE[2:0] **G1_CYCLE[2:0]** **B1_CYCLE[2:0]**	2-0	RGB1 cycle time		
		Bits	Blinking cycle time	Blinking frequency
		000	0.1s	10 Hz
		001	0.25s	4 Hz
		010	0.5s	2 Hz
		011	1s	1 Hz
		100	2s	0.5 Hz
		101	3s	0.33 Hz
		110	4s	0.25 Hz
		111	5s	0.2 Hz

Table 4. PATTERN_GEN_CTRL Register (11H):

Name	Bit	Description
EN_BLINK	3	Blinking sequence start bit 0 = disabled 1 = enabled

RGB Driver Electrical Characteristics (R1, G1, B1, R2, G2, B2 Outputs)

Symbol	Parameter	Condition	Min	Typ	Max	Unit
$I_{LEAKAGE}$	R1, G1, B1, R2, G2, B2 pin leakage current			0.1	**1**	μA
I_{RGB}	Maximum recommended sink current(1)	CC mode			**40**	mA
		SW mode			**50**	mA
	Accuracy @ 37mA	R_{RGB}=3.3 kΩ ±1%, CC mode		±5		%
	Current mirror ratio	CC mode		1:100		
	RGB1 and RGB2 current mismatch	I_{RGB}=37mA, CC mode		±5		%
R_{SW}	Switch resistance	SW mode		2.5	**5**	Ω
f_{RGB}	RGB switching frequency	Accuracy proportional to internal clock freq.	**18.2**	20	**21.8**	kHz
		If SYNC to external 5 MHz clock is in use		20		kHz

(1) **Note:** RGB current should be limited as follows:
constant current mode – limit by external R_{RGB} resistor;
switch mode – limit by external ballast resistors

Output Current vs Pin Voltage (Current Sink Mode)

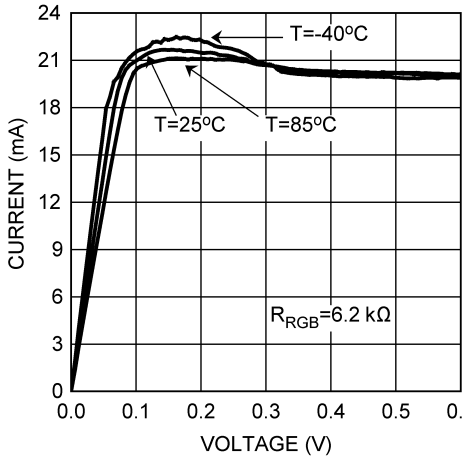

Pin Voltage vs Output Current (Switch Mode)

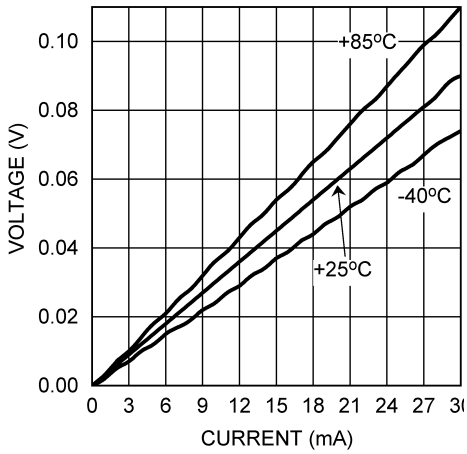

Output Current vs R_{RGB} (Current Sink Mode)

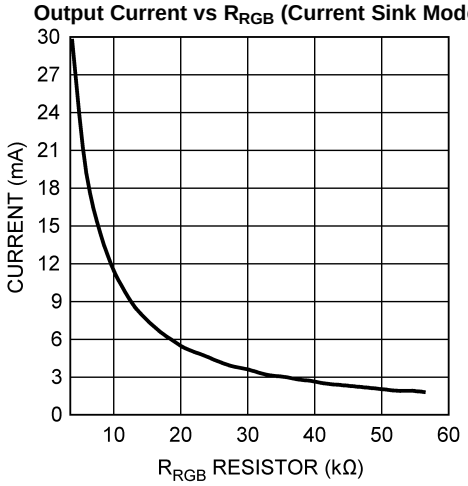

Copyright © 2007–2013, Texas Instruments Incorporated

Single High Current Driver

LP39542 has internal constant current driver that is capable of driving high current LED, mainly targeted for FLASH LED in camera phone applications.

MAXIMUM CURRENT SETUP FOR FLASH

The user sets the maximum current of FLASH with R_{FLASH} resistor based on following equation:

$$I_{MAX} = 300 \times 1.23V / (R_{FLASH} + 50\Omega), \quad (3)$$

where

Imax = maximum flash current in Amps (ie. 0.3A)

1.23V = reference voltage

300 = internal current mirror multiplier

R_{FLASH} = Resistor value in Ohms

50Ω = Internal resistor in the I_{FLASH} input

For example if 400mA is required for the maximum flash current, R_{FLASH} equals to

$$R_{FLASH} = 300 \times 1.23V / I_{MAX} – 50\Omega = 369V / 0.4A – 50\Omega = 873\Omega \text{ e.g. } 910\Omega \text{ resistor can be used} \quad (4)$$

CURRENT CONTROL FOR FLASH

To minimize the internal current consumption, the flash function has an enable bit EN_HCFLASH in the HC_Flash register.

EN_ HCFLASH	MODE
0	FLASH disabled, no extra current consumption through R_{FLASH}
1	FLASH enabled, IFLASH set by HC_SW[1:0] (see below)

HC[1:0] bits in the HC_Flash register control the FLASH current as show in following table.

HC[1:0]	I(FLASH)
00	$0.25 \times I_{MAX(FLASH)}$
01	$0.50 \times I_{MAX(FLASH)}$
10	$0.75 \times I_{MAX(FLASH)}$
11	$1.00 \times I_{MAX(FLASH)}$

Figure 12 shows the internal structure for the FLASH driver.

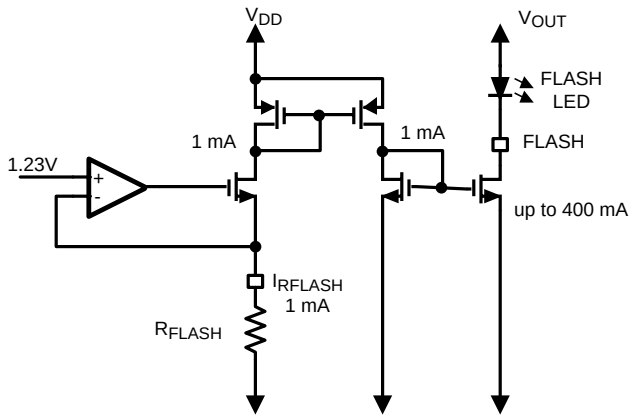

Figure 12.

FLASH TIMING

Flash output is turned on in lower current View finder mode when the EN_HCFLASH bit is written high. The actual flash at maximum current starts when the FLASH_EN digital input pin goes high. The Flash length can be selected from 3 pre-defined values or the FLASH_EN pin pulse length can determine how long the flash pulse is. After flash pulse the flash is shut down completely. To enable flash again, EN_HCFLASH bit must be set to 0 and then 1.The pulse length is controlled by the FT_T[1:0] bits in register 10H as show in the table below.

FL_T[1:0]	Flash duration typ	Current during view finder/focusing	Current during FLASH
00	200ms	Set by HC[1:0]	HC[11] = $I_{MAX(FLASH)}$
01	400ms	Set by HC[1:0]	HC[11] = $I_{MAX(FLASH)}$
10	600ms	Set by HC[1:0]	HC[11] = $I_{MAX(FLASH)}$
11	EN_FLASH on duration	Set by HC[1:0]	HC[11] = $I_{MAX(FLASH)}$

After the flash pulse the EN_HCFLASH bit has to be written low, the LP39542 does not clear this bit automatically. If 11b is selected in the FL_T[1:0] register, then it is possible to use safety bit EN_SAFETY in register 10H. When EN_SAFETY is 1, then the flash is shut down automatically, if the FLASH_EN pulse duration is longer than 1.2 seconds (typ.). This prevents any damage to the application circuitry, if the FLASH_EN pin is stuck high because of user or program error.

Figure 13 shows the functionality of the built-in flash

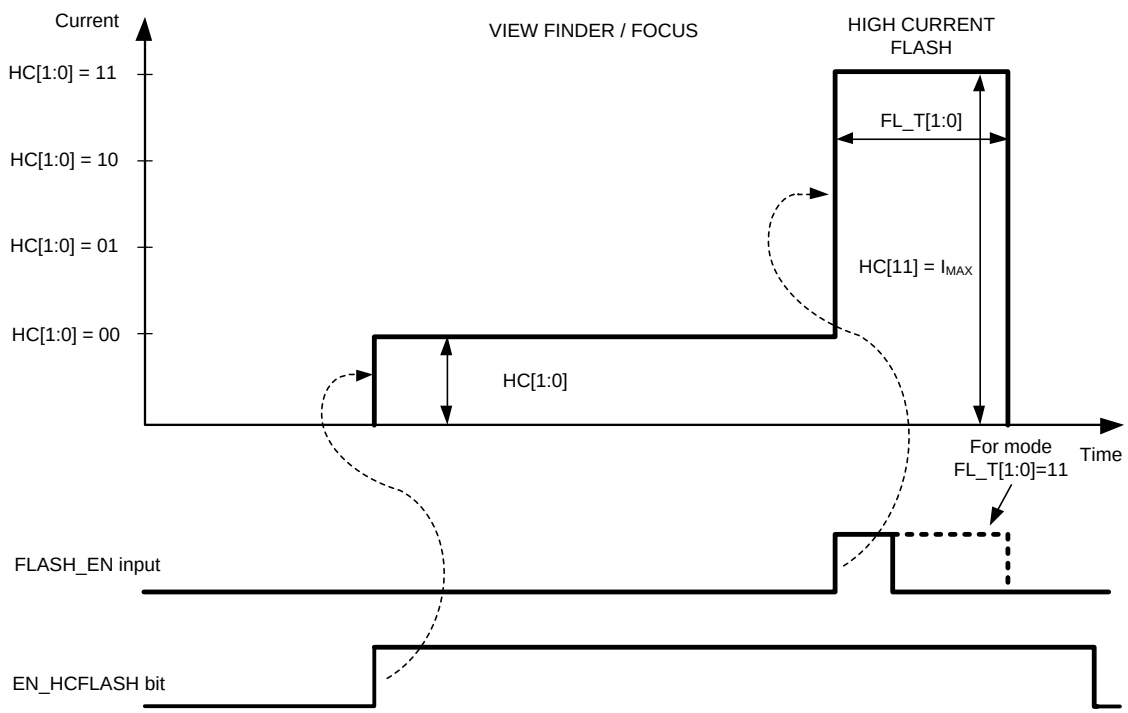

Figure 13.

Flash LED can be controlled also with external PWM signal:

Table 5. HC_FLASH Register (10H):

Name	Bit	Description
HC_PWM	5	Flash external PWM control 0 = Flash external PWM control disabled 1 = Flash external PWM control enabled

Copyright © 2007–2013, Texas Instruments Incorporated

High Current Driver Electrical Characteristics

Symbol	Parameter	Condition	Min	Typ	Max	Unit
$I_{LEAKAGE}$	FLASH pin leakage current			0.1	**2**	µA
$I_{MAX(FLASH)}$	Maximum Sink Current				**400**	mA
	Accuracy	R_{FLASH} = 910Ω	**-10** -5		**10** 5	%
	Current mirror ratio			1:300		
t_{SAFETY}	Flash safety time	EN_SAFETY = 1, FL_T = 11b		1.2		s

Backlight Drivers

LP39542 has 2 independent backlight drivers. Both drivers are regulated constant current sinks. LED current for both LED banks (WLED1…4 and WLED5…6) are controlled by 8-bit current mode DACs with 0.1 mA step.

WLED1…4 and WLED5…6 can be also controlled with one DAC for better matching allowing the use of larger displays having up to 6 white LEDs in parallel.

Display configuration is controlled with DISPL bit as shown in the following table.

DISPL	Configuration	Matching
0	Main display up to 4 LEDs	Good btw WLED1…4
	Sub display up to 2 LEDs	Good btw WLED5…6
1	Large display up to 6 LEDs	Good btw WLED 1…6

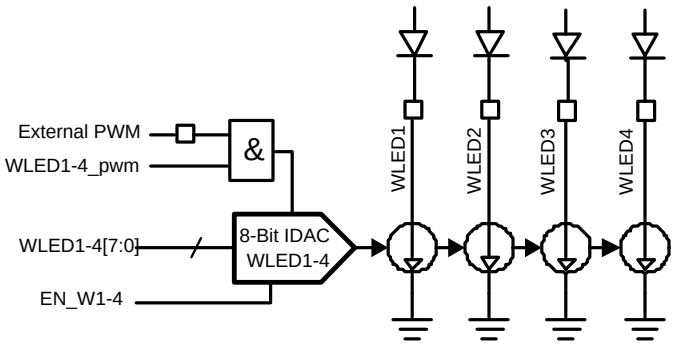

Figure 14. Main display up to 4 LEDs (WLED1…4)

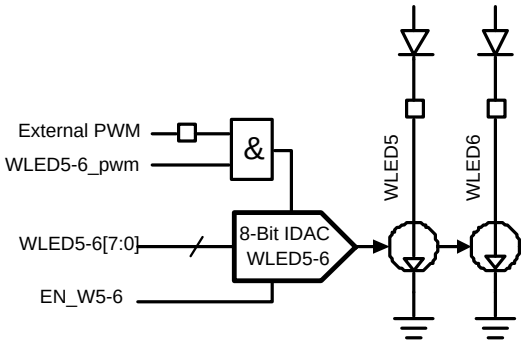

Figure 15. Sub display driver up to 2 LEDs (WLED5…6)

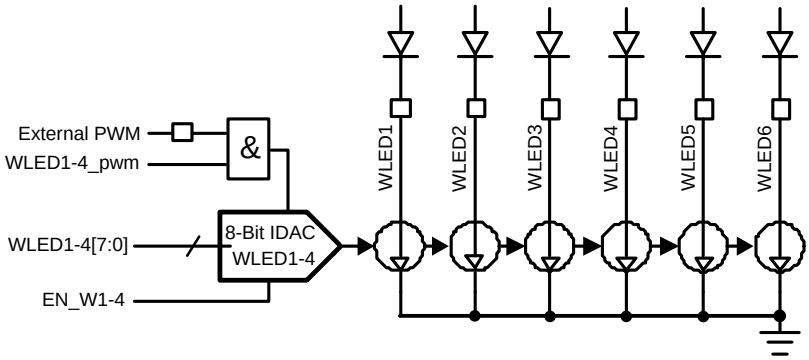

Figure 16. Main display up to 6 LEDs (WLED1…6) (DISPL=1)

FADE IN / FADE OUT

LP39542 has an automatic fade in and out for main and sub backlight. The fade function is enabled to main and sub backlights with EN_FADE_W1_4 and EN_FADE_W5_6 register bits. Register bits SLOPE_W1_4 and SLOPE_W5_6 set the slope of the fade curve. The fading times are shown in the graphs, which corresponds the full range current change (0-255). Note that when large display mode is selected (DISPL = 1), then EN_FADE_W5_6 and SLOPE_W5_6 bits do not have any effect.

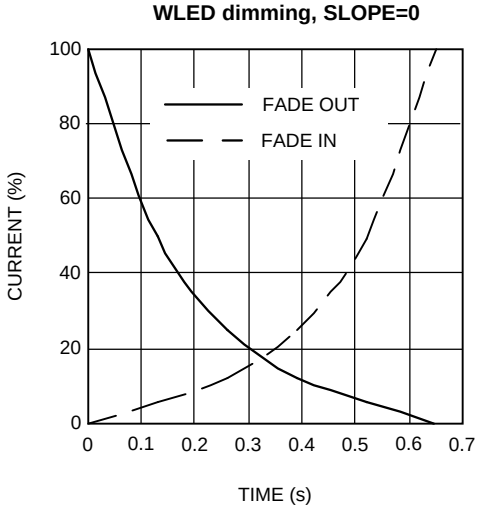

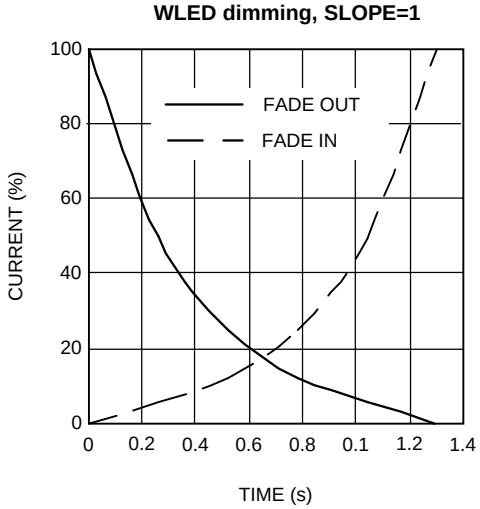

Table 6. WLED Control Register (08H)

Name	Bit	Description
SLOPE_W5_6	6	Slope for WLED5-6 0 = Full range fade execution time 1.30s 1 = Full range fade execution time 0.65s
SLOPE_W1_4	5	Slope for WLED1-4 0 = Full range fade execution time 1.30s 1 = Full range fade execution time 0.65s
EN_FADE_W5_6	4	Enable fade for WLED5-6 0 = Fade disabled 1 = Fade enabled
EN_FADE_W1_4	3	Enable fade for WLED1-4 0 = Fade disabled 1 = Fade enabled
DISPL	2	Large display mode enable 0 = WLED1-4 and WLED5-6 are controlled separately 1 = WLED1-4 and WLED5-6 are controlled with WLED1-4 controls

Copyright © 2007–2013, Texas Instruments Incorporated

Table 6. WLED Control Register (08H) (continued)

EN_W1_4	1	Enable WLED1-4 0 = WLED1-4 disabled 1 = WLED1-4 enabled
EN_W5_6	0	Enable WLED5-6 0 = WLED5-6 disabled 1 = WLED5-6 enabled

ADJUSTMENT

WLED1-4[7:0] WLED5-6[7:0]	Driver current, mA (typical)
0000 0000	0
0000 0001	0.1
0000 0010	0.2
0000 0011	0.3
…	…
…	…
1111 1101	25.3
1111 1110	25.4
1111 1111	25.5

Figure 17. WLED Output Current vs. Voltage

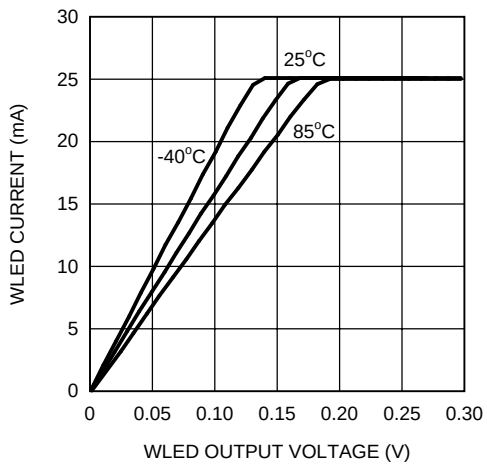

Backlight Driver Electrical Characteristics

Symbol	Parameter	Conditions	Min	Typ	Max	Unit
I_{MAX}	Maximum Sink Current		**21.3**	25.5	**29.4**	mA
$I_{leakage}$	Leakage Current			0.03	**1**	µA
I_{WLED1}	WLED1 Current tolerance	I_{WLED1} set to 12.8 mA (80H)	**10.52**	12.8	**14.78**	mA
			-18		**+16**	%
$I_{match1-4}$	Sink Current Matching (1)	I_{SINK} = 13 mA, Between WLED1…4		0.2		%
$I_{match5-6}$	Sink Current Matching	I_{SINK} = 13 mA, Between WLED5…6		0.2		%
$I_{match1-6}$	Sink Current Matching	I_{SINK} = 13 mA, Between WLED1…6		0.3		%

(1) **Note:** Matching is the maximum difference from the average.

Copyright © 2007–2013, Texas Instruments Incorporated

Ambient Light and Temperature Measurement with LP39542

The Analog-to-Digital converter (ADC) in the Audio Syncronization block can be also used for ambient light measurement or temperature measurement.

The selection between these modes is controlled with input selector bits INPUT_SEL[1:0] in register 2AH as seen on the following table. Internal averaging function can be used to filter unwanted noise from the measured signal. Averaging function can be enabled with EN_AVG bit in register 2BH.

INPUT_SEL[1:0]	Mode
00	Audio synchronization
01	Temperature measurement (voltage input)
10	Ambient light measurement (current input)
11	No input

EN_AVG = 0	Averaging disabled. f_{sample} = 122 Hz, data in register changes every 8.2 ms.
EN_AVG = 1	Averaging enabled. f_{sample} = 244 Hz, averaging of 64 samples, data in register changes every 262 ms (3.2Hz).

AMBIENT LIGHT MEASUREMENT

The ambient light measurement requires only one external component: Ambient light sensor (photo transistor or diode). The ADC reads the current level at ASE pin and converts the result into a digital word. User can read the ADC output from the ADC output register. The known ambient light condition allows user to set the backlight current to optimal level thus saving power especially in low light and bright sunlight condition.

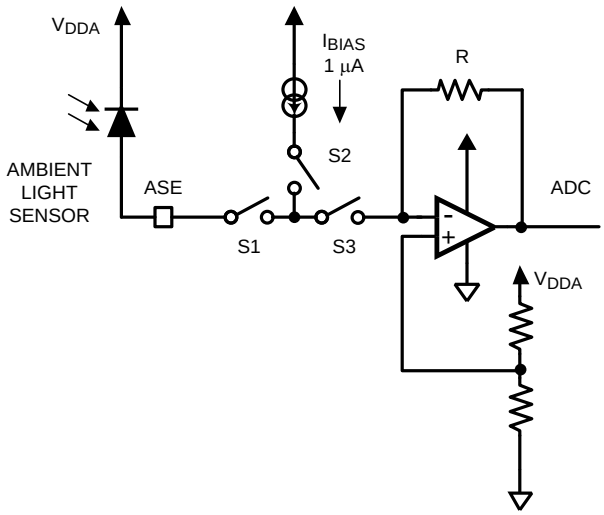

Figure 18. ASE Input Configuration for Light Measurement

Copyright © 2007–2013, Texas Instruments Incorporated

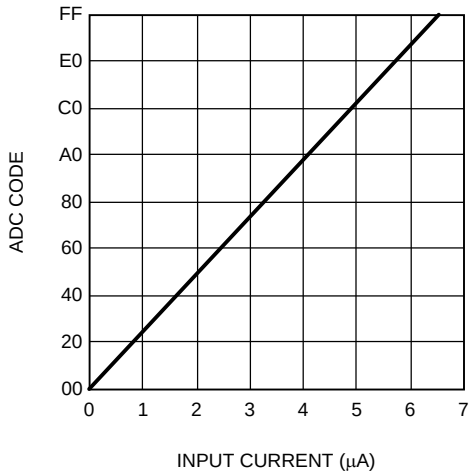

Figure 19. ADC Code vs Input Current in Light Measurement Mode

TEMPERATURE MEASUREMENT

The temperature measurement requires two external components: resistor and thermistor (resistor that has known temperature vs resistance curve). The ADC reads the voltage level at ASE pin and converts the result into a digital word. User can read the ADC output from register. The known temperature allows for example to monitor the temperature inside the display module and decrease the current level of the LEDs if temperature raises too high. This function may increase lifetime of LEDs in some applications.

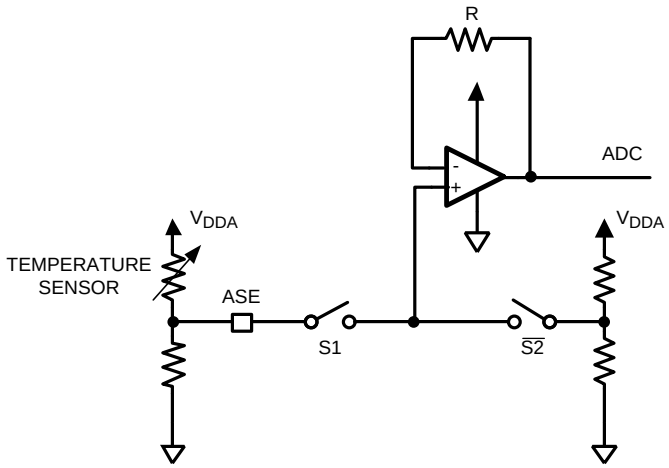

Figure 20. Temperature sensor connection example

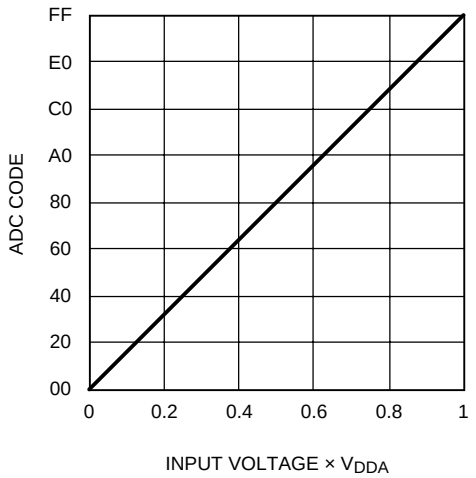

Figure 21. ADC Code vs Input Voltage in temperature measurement mode

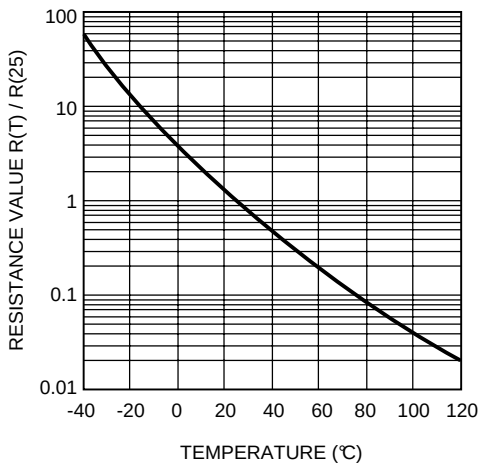

Figure 22. Example curve for thermistor

EXAMPLE TEMP SENSOR READING AT DIFFERENT TEMPERATURES ($R_{25°C}$ = 1MΩ)

T(°C)	R(MΩ)	Rt(MΩ)	V(ASE)
-40	1	60	2.7540984
0	1	4	2.24
25	1	1	1.4
60	1	0.2	0.4666667
100	1	0.04	0.1076923

7V Shielding

To shield LP39542 from high input voltages 6…7.2V the use of external 2.8V LDO is required. This 2.8V voltage protects internally the device against high voltage condition. The recommended connection is as shown in the picture below. Internally both logic and analog circuitry works at 2.8V supply voltage. Both supply voltage pins should have separate filtering capacitors.

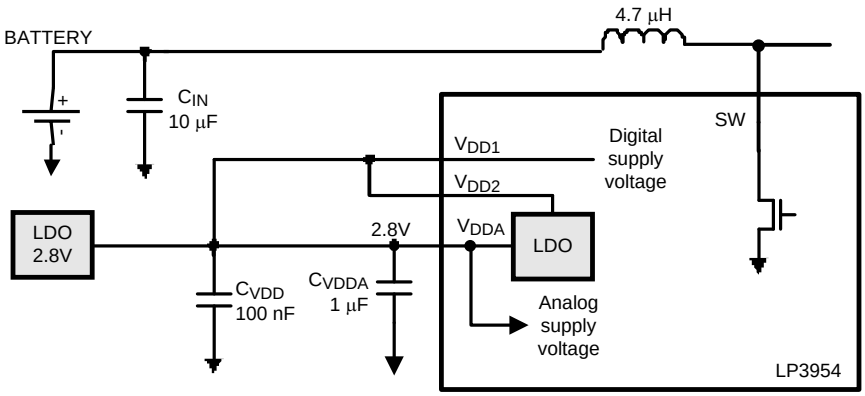

In cases where high voltage is not an issue the connection is as shown below

Copyright © 2007–2013, Texas Instruments Incorporated

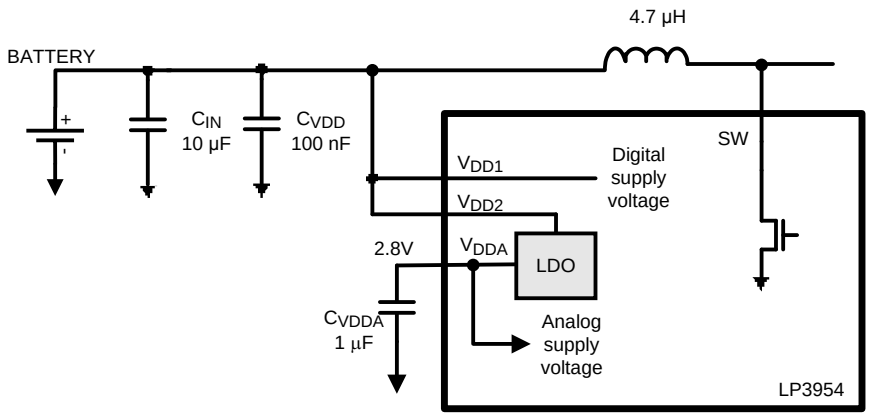

Logic Interface Electrical Characteristics

(1.65V ≤ V_{DDIO} ≤ $V_{DD1,2}$V) (Unless otherwise noted).

Symbol	Parameter	Test Conditions	Min	Typ	Max	Unit
LOGIC INPUTS ADDR_SEL, NRST, SCL, SYNC_PWM, FLASH_EN, SDA						
V_{IL}	Input Low Level				**0.2×V_{DDIO}**	V
V_{IH}	Input High Level		**0.8×V_{DDIO}**			V
I_L	Logic Input Current		**−1.0**		**1.0**	µA
f_{SCL}	Clock Frequency				**400**	kHz
LOGIC OUTPUT SDA						
V_{OL}	Output Low Level	I_{SDA} = 3 mA		0.3	**0.5**	V
I_L	Output Leakage Current	V_{SDA} = 2.8V			**1.0**	µA

Note: Any unused digital input pin has to be connected to GND to avoid floating and extra current consumption.

I²C Compatible Interface

INTERFACE BUS OVERVIEW

The I²C compatible synchronous serial interface provides access to the programmable functions and registers on the device. This protocol uses a two-wire interface for bi-directional communications between the devices connected to the bus. The two interface lines are the Serial Data Line (SDA), and the Serial Clock Line (SCL). These lines should be connected to a positive supply, via a pull-up resistor and remain HIGH even when the bus is idle. Every device on the bus is assigned a unique address and acts as either a Master or a Slave depending on whether it generates or receives the serial clock (SCL).

DATA TRANSACTIONS

One data bit is transferred during each clock pulse. Data is sampled during the high state of the serial clock (SCL). Consequently, throughout the clock's high period, the data should remain stable. Any changes on the SDA line during the high state of the SCL and in the middle of a transaction, aborts the current transaction. New data should be sent during the low SCL state. This protocol permits a single data line to transfer both command/control information and data using the synchronous serial clock.

I²C DATA VALIDITY

The data on SDA line must be stable during the HIGH period of the clock signal (SCL). In other words, state of the data line can only be changed when CLK is LOW.

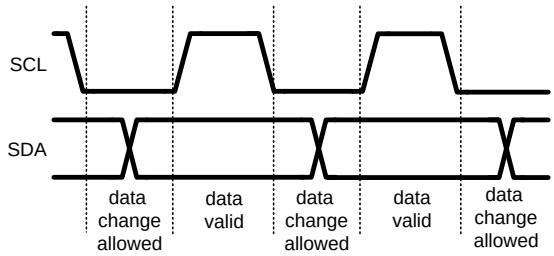

Figure 23. I²C Signals: Data Validity

I²C START AND STOP CONDITIONS

START and STOP bits classify the beginning and the end of the I²C session. START condition is defined as SDA signal transitioning from HIGH to LOW while SCL line is HIGH. STOP condition is defined as the SDA transitioning from LOW to HIGH while SCL is HIGH. The I²C master always generates START and STOP bits. The I²C bus is considered to be busy after START condition and free after STOP condition. During data transmission, I²C master can generate repeated START conditions. First START and repeated START conditions are equivalent, function-wise.

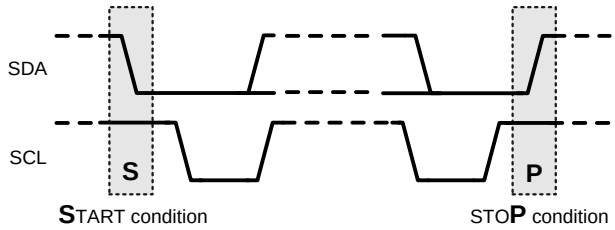

TRANSFERRING DATA

Every byte put on the SDA line must be eight bits long, with the most significant bit (MSB) being transferred first. Each byte of data has to be followed by an acknowledge bit. The acknowledge related clock pulse is generated by the master. The transmitter releases the SDA line (HIGH) during the acknowledge clock pulse. The receiver must pull down the SDA line during the 9th clock pulse, signifying an acknowledge. A receiver which has been addressed must generate an acknowledge after each byte has been received.

After the START condition, the I²C master sends a chip address. This address is seven bits long followed by an eighth bit which is a data direction bit (R/W). The LP39542 address is 54h or 55H as selected with ADDR_SEL pin. **I²C address for LP39542 is 54H when ADDR_SEL=0 and 55H when ADDR_SEL=1**. For the eighth bit, a "0" indicates a WRITE and a "1" indicates a READ. The second byte selects the register to which the data will be written. The third byte contains data to write to the selected register.

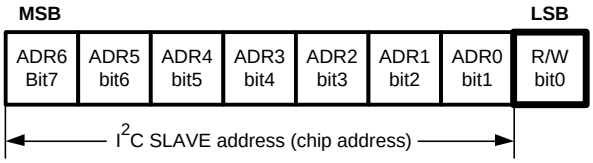

Figure 24. I²C Chip Address

Register changes take an effect at the SCL rising edge during the last ACK from slave.

Copyright © 2007–2013, Texas Instruments Incorporated

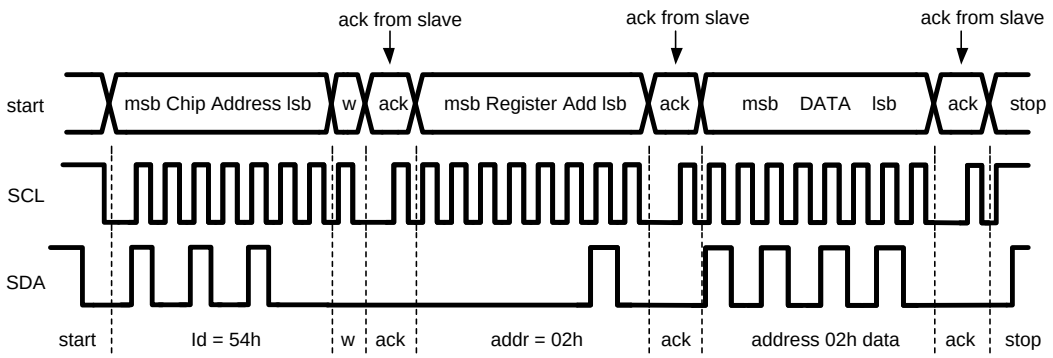

w = write (SDA = “0”)
r = read (SDA = “1”)
ack = acknowledge (SDA pulled down by either master or slave)
rs = repeated start
id = 7-bit chip address, 54H (ADDR_SEL=0) or 55H (ADDR_SEL=1) for LP39542.

Figure 25. I²C Write Cycle

When a READ function is to be accomplished, a WRITE function must precede the READ function, as shown in the Read Cycle waveform.

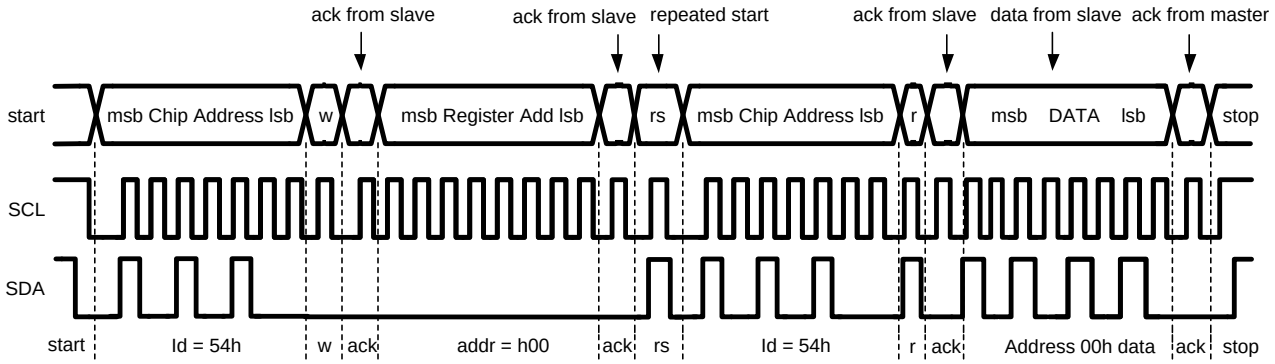

Figure 26. I²C Read Cycle

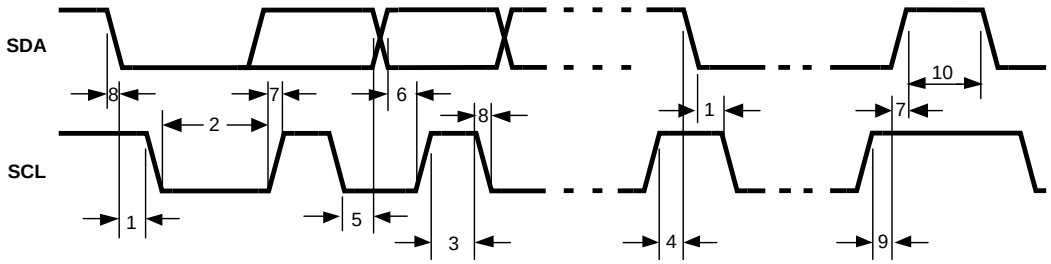

Figure 27. I²C Timing Diagram

I²C Timing Parameters

$V_{DD1,2}$ = 3.0 to 4.5V, V_{DD_IO} = 1.65V to $V_{DD1,2}$

Symbol	Parameter	Limit(1)		Unit
		Min	Max	

(1) Specified by design. Not production tested.

1	Hold Time (repeated) START Condition	0.6		µs
2	Clock Low Time	1.3		µs
3	Clock High Time	600		ns
4	Setup Time for a Repeated START Condition	600		ns
5	Data Hold Time (Output direction, delay generated by LP39542)	300	900	ns
5	Data Hold Time (Input direction, delay generated by the Master)	0	900	ns
6	Data Setup Time	100		ns
7	Rise Time of SDA and SCL	$20+0.1C_b$	300	ns
8	Fall Time of SDA and SCL	$15+0.1C_b$	300	ns
9	Set-up Time for STOP condition	600		ns
10	Bus Free Time between a STOP and a START Condition	1.3		µs
C_b	Capacitive Load for Each Bus Line	10	200	pF

Autoincrement mode is available, with this mode it is possible to read or write bytes with autoincreasing addresses. LP39542 has empty spaces in address register map, and it is recommended to use autoincrement mode only for writing in pattern command registers.

Recommended External Components

OUTPUT CAPACITOR, C_{OUT}

The output capacitor C_{OUT} directly affects the magnitude of the output ripple voltage. In general, the higher the value of C_{OUT}, the lower the output ripple magnitude. Multilayer ceramic capacitors with low ESR are the best choice. At the lighter loads, the low ESR ceramics offer a much lower Vout ripple that the higher ESR tantalums of the same value. At the higher loads, the ceramics offer a slightly lower Vout ripple magnitude than the tantalums of the same value. However, the dv/dt of the Vout ripple with the ceramics is much lower than the tantalums under all load conditions. Capacitor voltage rating must be sufficient, 10V or greater is recommended.

Some ceramic capacitors, especially those in small packages, exhibit a strong capacitance reduction with the increased applied DC voltage, so called DC bias effect. The capacitance value can fall to below half of the nominal capacitance. Too low output capacitance will increase noise and it can make the boost converter unstable. Recommended maximum DC bias effect at 5V DC voltage is -50%.

INPUT CAPACITOR, C_{IN}

The input capacitor C_{IN} directly affects the magnitude of the input ripple voltage and to a lesser degree the V_{OUT} ripple. A higher value C_{IN} will give a lower V_{IN} ripple. Capacitor voltage rating must be sufficient, 10V or greater is recommended.

OUTPUT DIODE, D_1

A schottky diode should be used for the output diode. Peak repetitive current rating of the schottky diode should be larger than the peak inductor current (ca. 1A). Average current rating of the schottky diode should be higher than maximum output current (400 mA). Schottky diodes with a low forward drop and fast switching speeds are ideal for increasing efficiency in portable applications. Choose a reverse breakdown of the schottky diode larger than the output voltage. Do not use ordinary rectifier diodes, since slow switching speeds and long recovery times cause the efficiency and the load regulation to suffer.

INDUCTOR, L_1

The LP39542's high switching frequency enables the use of the small surface mount inductor. A 4.7 µH shielded inductor is suggested for 2 MHz operation, 10 µH should be used at 1 MHz. The inductor should have a saturation current rating higher than the peak current it will experience during circuit operation **(ca. 1A)**. Less than 300 mΩ ESR is suggested for high efficiency. Open core inductors cause flux linkage with circuit components and interfere with the normal operation of the circuit. This should be avoided. For high efficiency, choose an inductor with a high frequency core material such as ferrite to reduce the core losses. To minimize radiated noise, use a toroid, pot core or shielded core inductor. The inductor should be connected to the SW pin as close to the IC as possible. Examples of suitable inductors are: TDK VLF4012AT-4R7M1R1 and Panasonic ELLVEG4R7N.

Copyright © 2007–2013, Texas Instruments Incorporated

LIST OF RECOMMENDED EXTERNAL COMPONENTS

Symbol	Symbol explanation	Value	Unit	Type
C_{VDD1}	C between VDD1 and GND	100	nF	Ceramic, X7R / X5R
C_{VDD2}	C between VDD2 and GND	100	nF	Ceramic, X7R / X5R
C_{VDDIO}	C between VDDIO and GND	100	nF	Ceramic, X7R / X5R
C_{VDDA}	C between VDDA and GND	1	µF	Ceramic, X7R / X5R
C_{OUT}	C between FB and GND	10	µF	Ceramic, X7R / X5R, 10V
C_{IN}	C between battery voltage and GND	10	µF	Ceramic, X7R / X5R
L_1	L between SW and V_{BAT} at 2 MHz	4.7	µH	Shielded, low ESR, Isat 1A
C_{VREF}	C between V_{REF} and GND	100	nF	Ceramic, X7R
C_{VDDIO}	C between V_{DDIO} and GND	100	nF	Ceramic, X7R
R_{FLASH}	R between I_{FLASH} and GND	1.2	kΩ	±1%
R_{RBG}	R between I_{RGB} and GND	5.6	kΩ	±1%
R_{RT}	R between I_{RT} and GND	82	kΩ	±1%
D_1	Rectifying Diode (Vf @ maxload)	0.3	V	Schottky diode
C_{ASE}	C between Audio input and ASE	100	nF	Ceramic, X7R / X5R
LEDs		User defined		
D_{LIGHT}	Light Sensor	TDK BSC2015		

Copyright © 2007–2013, Texas Instruments Incorporated

Application Examples

EXAMPLE 1

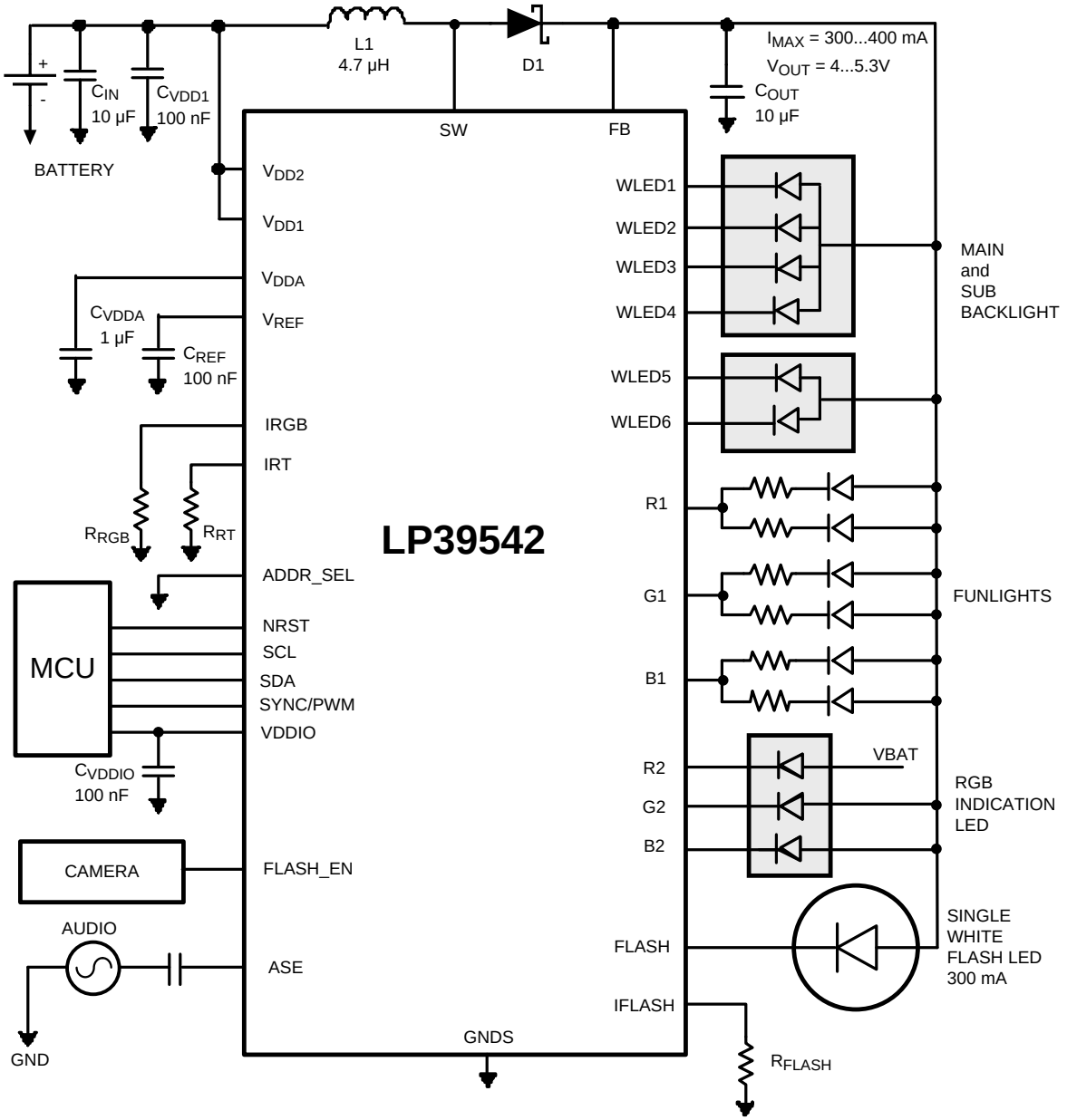

- MAIN BACKLIGHT
- SUB BACKLIGHT
- AUDIO SYNCHRONIZED FUNLIGHTS
- RGB INDICATION LIGHT
- FLASH LED

Figure 28. FLIP PHONE

Copyright © 2007–2013, Texas Instruments Incorporated

EXAMPLE 2

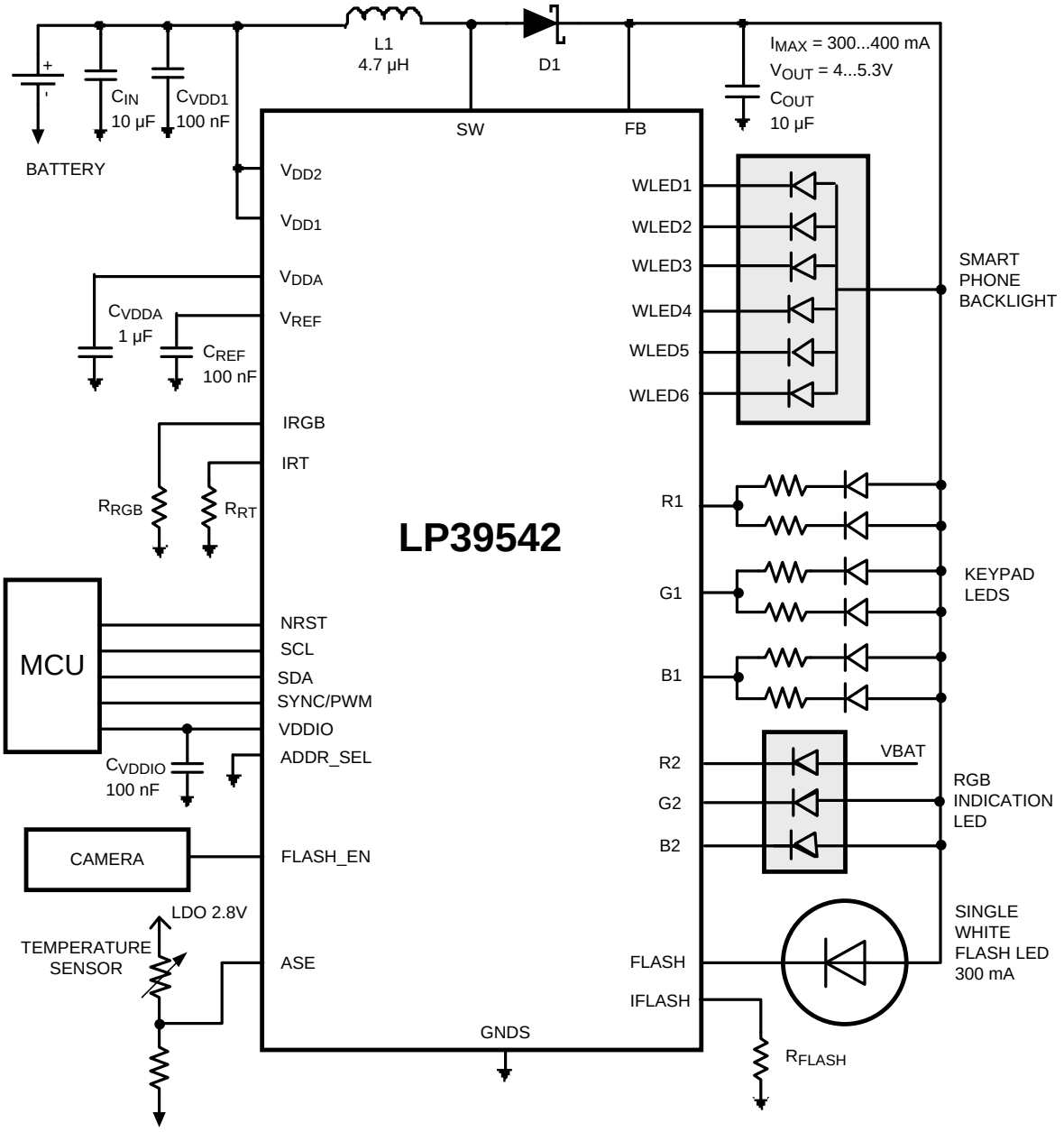

- 6 WHITE LED BACKLIGHT
- KEYPAD LIGHTS
- RGB INDICATION LED
- WHITE SINGLE LED FLASH
- TEMPERATURE SENSOR

Figure 29. SMART PHONE

EXAMPLE 3

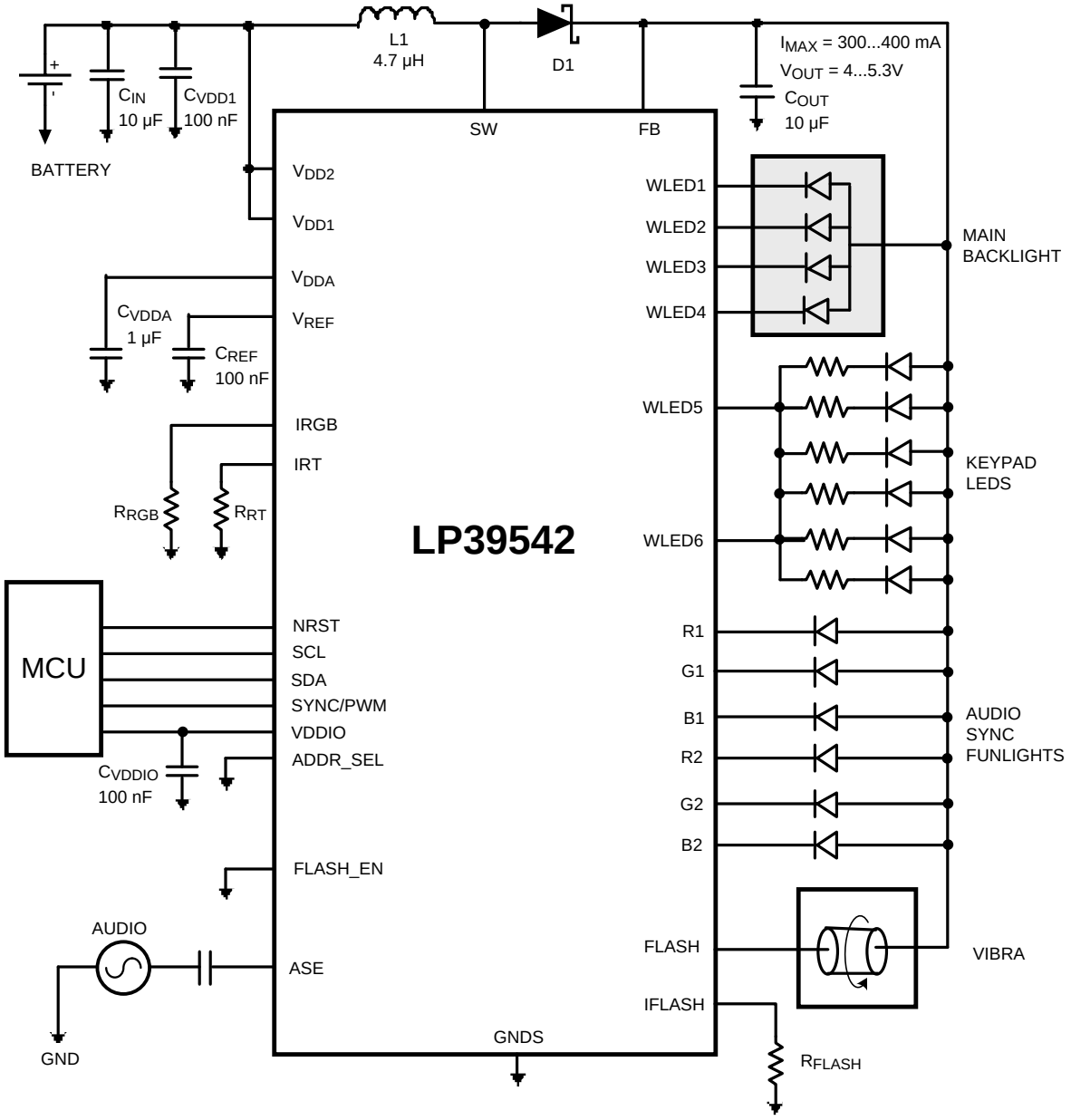

- MAIN BACKLIGHT
- KEYPAD LIGHTS
- AUDIO SYNCHRONIZED FUNLIGHTS
- VIBRA

Figure 30. CANDYBAR PHONE

Copyright © 2007–2013, Texas Instruments Incorporated

EXAMPLE 4

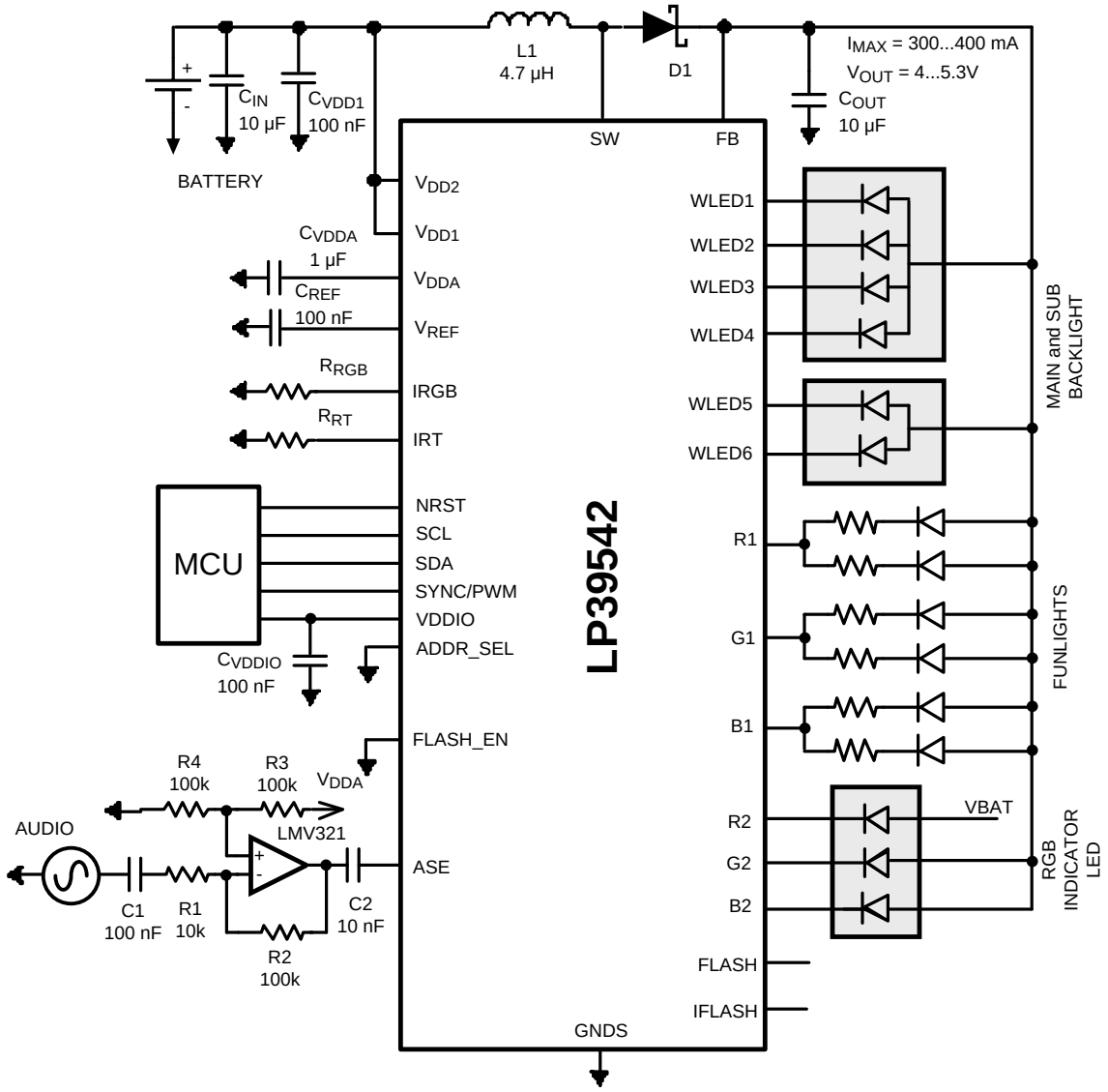

- MAIN BACKLIGHT
- SUB BACKLIGHT
- AUDIO SYNCHRONIZED FUNLIGHTS
- RGB INDICATION LIGHT

There may be cases where the audio input signal going into the LP39542 is too weak for audio synchronization. This figure presents a single-supply inverting amplifier connected to the ASE input for audio signal amplification. The amplification is +20 dB, which is well enough for 20 mVp-p audio signal. Because the amplifier (LMV321) is operating in single supply voltage, a voltage divider using R3 and R4 is implemented to bias the amplifier so the input signal is within the input common-mode voltage range of the amplifier. The capacitor C1 is placed between the inverting input and resistor R1 to block the DC signal going into the audio signal source. The values of R1 and C1 affect the cutoff frequency, fc = 1/(2π*R1*C1), in this case it is around 160 Hz. As a result, the LMV321 output signal is centered around mid-supply, that is $V_{DDA}/2$. The output can swing to both rails, maximizing the signal-to-noise ratio in a low voltage system

Figure 31. USING EXTRA AMPLIFIER

EXAMPLE 5

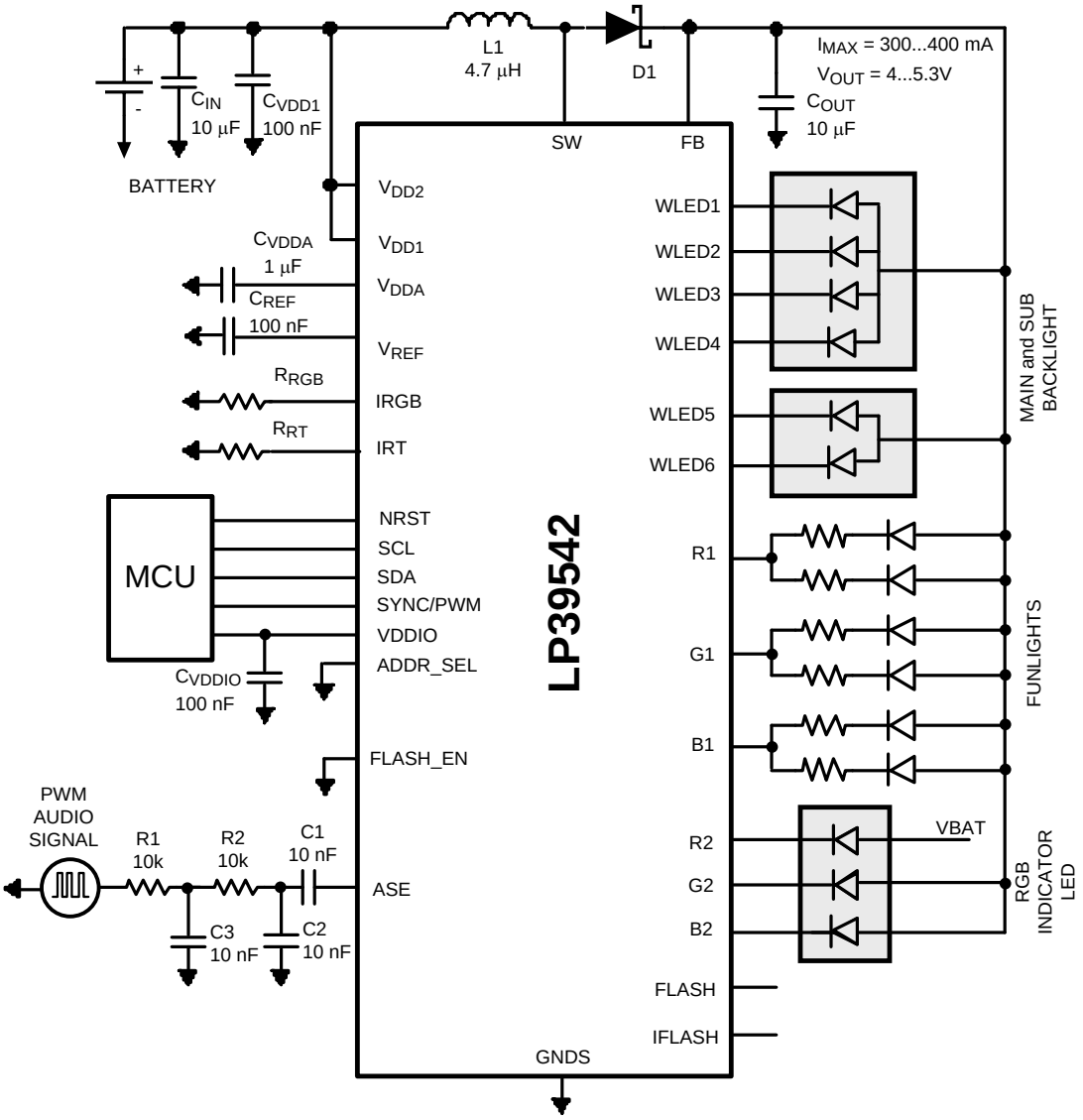

- MAIN BACKLIGHT
- SUB BACKLIGHT
- AUDIO SYNCHRONIZED FUNLIGHTS
- RGB INDICATION LIGHT

Here, a second order RC-filter is used on the ASE input to convert a PWM signal to an analog waveform.

Figure 32. USING PWM SIGNAL

More application information is available in the document "LP39542 Evaluation Kit".

Copyright © 2007–2013, Texas Instruments Incorporated

LP39542 Registers

Table 7. LP39542 Control Register Names and Default Values

ADDR (HEX)	REGISTER	D7	D6	D5	D4	D3	D2	D1	D0
00	RGB Ctrl	cc_rgb1	cc_rgb2	r1sw	g1sw	b1sw	r2sw	g2sw	b2sw
		1	1	0	0	0	0	0	0
01	R1 blink	r1_on[3]	r1_on[2]	r1_on[1]	r1_on[0]	r1_off[3]	r1_off[2]	r1_off[1]	r1_off[0]
		0	0	0	0	0	0	0	0
02	R1 cycle					r1_cycle en	r1_cycle[2]	r1_cycle[1]	r1_cycle[0]
						0	0	0	0
03	G1 blink	g1_on[3]	g1_on[2]	g1_on[1]	g1_on[0]	g1_off[3]	g1_off[2]	g1_off[1]	g1_off[0]
		0	0	0	0	0	0	0	0
04	G1 cycle					g1_cycle en	g1_cycle[2]	g1_cycle[1]	g1_cycle[0]
						0	0	0	0
05	B1 blink	b1_on[3]	b1_on[2]	b1_on[1]	b1_on[0]	b1_off[3]	b1_off[2]	b1_off[1]	b1_off[0]
		0	0	0	0	0	0	0	0
06	B1 cycle					b1_cycle en	b1_cycle[2]	b1_cycle[1]	b1_cycle[0]
						0	0	0	0
07	Ext. PWM control	wled1_4_pwm	wled5_6_pwm	r1_pwm	g1_pwm	b1_pwm	r2_pwm	g2_pwm	b2_pwm
		0	0	0	0	0	0	0	0
08	WLED control		slope_w5_6	slope_w1_4	en_fade_w5_6	en_fade_w1_4	displ	en_w1_4	en_w5_6
			0	0	0	0	0	0	0
09	WLED1-4	wled1_4[7:0]							
		0	0	0	0	0	0	0	0
0A	WLED5-6	wled5_6[7:0]							
		0	0	0	0	0	0	0	0
0B	Enables	pwm_sync	nstby	en_boost			en_autoload	rgb_sel[1:0]	
		0	0	0			1	0	0
0C	ADC output	data[7:0]							
		0	0	0	0	0	0	0	0
0D	Boost output	boost[7:0]							
		0	0	1	1	1	1	1	1
0E	Boost_frq						freq_sel[2:0]		
							1	1	1
10	HC_Flash		en_safety	hc_pwm	fl_t[1:0]		hc[1:0]		en_hcflash
			0	0	0	0	0	0	0
11	Pattern gen ctrl						rgb_start	loop	log
							0	0	0
12	RGB1 max current			ir1[1:0]		ig1[1:0]		ib1[1:0]	
				0	0	0	0	0	0
13	RGB2 max current			ir2[1:0]		ig2[1:0]		ib2[1:0]	
				0	0	0	0	0	0
2A	Audio sync CTRL1	gain_sel[2:0]			sync_mode	en_agc	en_sync	input_sel[1:0]	
		0	0	0	0	0	0	1	1
2B	Audio sync CTRL2				en_avg	mode_ctrl[1:0]		speed_ctrl[1:0]	
					0	0	0	0	0
50	Command 1A	r[2:0]			g[2:0]			cet[3:2]	
		0	0	0	0	0	0	0	0
51	Command 1B	cet[1:0]		b[2:0]			tt[2:0]		
		0	0	0	0	0	0	0	0

Copyright © 2007–2013, Texas Instruments Incorporated

Table 7. LP39542 Control Register Names and Default Values (continued)

ADDR (HEX)	REGISTER	D7	D6	D5	D4	D3	D2	D1	D0
52	Command 2A	r[2:0]			g[2:0]			cet[3:2]	
		0	0	0	0	0	0	0	0
53	Command 2B	cet[1:0]		b[2:0]			tt[2:0]		
		0	0	0	0	0	0	0	0
54	Command 3A	r[2:0]			g[2:0]			cet[3:2]	
		0	0	0	0	0	0	0	0
55	Command 3B	cet[1:0]		b[2:0]			tt[2:0]		
		0	0	0	0	0	0	0	0
56	Command 4A	r[2:0]			g[2:0]			cet[3:2]	
		0	0	0	0	0	0	0	0
57	Command 4B	cet[1:0]		b[2:0]			tt[2:0]		
		0	0	0	0	0	0	0	0
58	Command 5A	r[2:0]			g[2:0]			cet[3:2]	
		0	0	0	0	0	0	0	0
59	Command 5B	cet[1:0]		b[2:0]			tt[2:0]		
		0	0	0	0	0	0	0	0
5A	Command 6A	r[2:0]			g[2:0]			cet[3:2]	
		0	0	0	0	0	0	0	0
5B	Command 6B	cet[1:0]		b[2:0]			tt[2:0]		
		0	0	0	0	0	0	0	0
5C	Command 7A	r[2:0]			g[2:0]			cet[3:2]	
		0	0	0	0	0	0	0	0
5D	Command 7B	cet[1:0]		b[2:0]			tt[2:0]		
		0	0	0	0	0	0	0	0
5E	Command 8A	r[2:0]			g[2:0]			cet[3:2]	
		0	0	0	0	0	0	0	0
5F	Command 8B	cet[1:0]		b[2:0]			tt[2:0]		
		0	0	0	0	0	0	0	0
60	Reset	Writing any data to Reset Register resets LP39542							

REGISTER BIT EXPLANATIONS

Each register is shown with a key indicating the accessibility of the each individual bit, and the initial condition:

Register Bit Accessibility and Initial Condition	
Key	**Bit Accessibility**
rw	Read/write
r	Read only
–0,–1	Condition after POR

Copyright © 2007–2013, Texas Instruments Incorporated

RGB CTRL (00H) – RGB LEDS CONTROL REGISTER

D7	D6	D5	D4	D3	D2	D1	D0
cc_rgb1	**cc_rgb2**	**r1sw**	**g1sw**	**b1sw**	**r2sw**	**g2sw**	**b2sw**
rw-1	rw-1	rw-0	rw-0	rw-0	rw-0	rw-0	rw-0

cc_rgb1	Bit 7	0 - R1, G1 and B1 are constant current sinks, current limited internally 1 - R1, G1 and B1 are switches, limit current with external ballast resistor
cc_rgb2	Bit 6	0 – R2, G2 and B2 are constant current sinks, current limited internally 1 – R2, G2 and B2 are switches, limit current with external ballast resistor
r1sw	Bit 5	0 – R1 disabled 1 – R1 enabled
g1sw	Bit 4	0 – G1 disabled 1 – G1 enabled
b1sw	Bit 3	0 – B1 disabled 1 – B1 enabled
r2sw	Bit 2	0 – R2 disabled 1 – R2 enabled
g2sw	Bit 1	0 – G2 disabled 1 – G2 enabled
b2sw	Bit 0	0 – B2 disabled 1 – B2 enabled

R1/G1/B1 BLINK (01H, 03H, 05H) – BLINKING ON/OFF TIME CONTROL REGISTER

D7	D6	D5	D4	D3	D2	D1	D0
R1/G1/B1_ON[3:0]				**R1/G1/B1_OFF[3:0]**			
rw-0	rw-0	rw-0	rw-0	rw-0	rw-0	rw-0	rw-0

		RGB1 ON and OFF time	
		Bits	ON/OFF time
R1_ON[3:0], R1_OFF[3:0] G1_ON[3:0], G1_OFF[3:0] B1_ON[3:0], B1_OFF[3:0]	Bits 7-4, 3-0	0000	0%
		0001	1%
		0010	2.5%
		0011	5%
		0100	7.5%
		0101	10%
		0110	15%
		0111	20%
		1000	30%
		1001	40%
		1010	50%
		1011	60%
		1100	70%
		1101	80%
		1110	90%
		1111	100%

R1/G1/B1 CYCLE(02H, 04H, 06H) – BLINKING CYCLE CONTROL REGISTER

D7	D6	D5	D4	D3	D2	D1	D0
				R1/G1/B1_CYCLE_EN	**R1/G1/B1_CYCLE[2:0]**		
r-0	r-0	r-0	r-0	rw-0	rw-0	rw-0	rw-0

Copyright © 2007–2013, Texas Instruments Incorporated

R1_CYCLE_EN **G1_CYCLE_EN** **B1_CYCLE_EN**	Bit 3	Blinking enable 0 = disabled, output state is defined with RGB registers 1 = enabled, output state is defined with blinking cycle		
R1_CYCLE[2:0] **G1_CYCLE[2:0]** **B1_CYCLE[2:0]**	Bits 2-0	**RGB1 cycle time**		
		Bits	Blinking cycle time	Blinking frequency
		000	0.1s	10 Hz
		001	0.25s	4 Hz
		010	0.5s	2 Hz
		011	1s	1 Hz
		100	2s	0.5 Hz
		101	3s	0.33 Hz
		110	4s	0.25 Hz
		111	5s	0.2 Hz

EXT_PWM_CONTROL (07H) – EXTERNAL PWM CONTROL REGISTER

D7	D6	D5	D4	D3	D2	D1	D0
wled1_4_pwm	**wled5_6_pwm**	**r1_pwm**	**g1_pwm**	**b1_pwm**	**r2_pwm**	**g2_pwm**	**b2_pwm**
rw-0	rw-0	rw-0	rw-0	rw-0	rw-0	rw-0	rw-0

wled1_4_pwm	Bit 7	0 – WLED1…WLED4 PWM control disabled 1 – WLED1…WLED4 PWM control enabled
wled5_6_pwm	Bit 6	0 – WLED5, WLED6 PWM control disabled 1 – WLED5, WLED6 PWM control enabled
r1_pwm	Bit 5	0 – R1 PWM control disabled 1 – R1 PWM control enabled
g1_pwm	Bit 4	0 – G1 PWM control disabled 1 – G1 PWM control enabled
b1_pwm	Bit 3	0 – RB PWM control disabled 1 – B1 PWM control enabled
r2_pwm	Bit 2	0 – R2 PWM control disabled 1 – R2 PWM control enabled
g2_pwm	Bit 1	0 – G2 PWM control disabled 1 – G2 PWM control enabled
b2_pwm	Bit 0	0 – B2 PWM control disabled 1 – B2 PWM control enabled

Copyright © 2007–2013, Texas Instruments Incorporated

WLED CONTROL (08H) – WLED CONTROL REGISTER

D7	D6	D5	D4	D3	D2	D1	D0
	slope_w5_6	**slope_w1_4**	**en_fade_w5_6**	**en_fade_w1_4**	**displ**	**en_w1_4**	**en_w5_6**
r-0	rw-0	rw-0	rw-0	rw-0	rw-0	rw-0	rw-0

slope_w5_6	Bit 6	0 – WLED5-6 full range fade execution time 1.3s 1 – WLED5-6 full range fade execution time 0.65s
slope_w1_4	Bit 5	0 – WLED1-4 full range fade execution time 1.3s 1 – WLED1-4 full range fade execution time 0.65s
en_fade_w5_6	Bit 4	0 – disable fade for WLED5-6 1 – enable fade for WLED5-6
en_fade_w1_4	Bit 3	0 – disable fade for WLED1-4 1 – enable fade for WLED1-4
displ	Bit 2	0 – WLED1-4 and WLED5-6 are controlled separately 1 – WLED1-4 and WLED5-6 are controlled with WLED1-4 controls
en_w1_4	Bit 1	0 – WLED1-4 disabled 1 – WLED1-4 enabled
en_w5_6	Bit 0	0 – WLED5-6 disabled 1 – WLED5-6 enabled

WLED1-4 (09H) – WLED1…WLED4 BRIGHTNESS CONTROL REGISTER

D7	D6	D5	D4	D3	D2	D1	D0
wled1_4[7:0]							
rw-0	rw-0	rw-0	rw-0	rw-0	rw-0	rw-0	rw-0

		Adjustment	
		wled1_4[7:0]	**Typical driver current (mA)**
wled1_4[7:0]	Bits 7-0	0000 0000	0
		0000 0001	0.1
		0000 0010	0.2
		0000 0011	0.3
		0000 0100	0.4
		…	…
		1111 1101	25.3
		1111 1110	25.4
		1111 1111	25.5

WLED5-6 (0AH) – WLED5, WLED6 BRIGHTNESS CONTROL REGISTER

D7	D6	D5	D4	D3	D2	D1	D0
wled5_6[7:0]							
rw-0	rw-0	rw-0	rw-0	rw-0	rw-0	rw-0	rw-0

		Adjustment	
		wled5_6[7:0]	**Typical driver current (mA)**
wled5_6[7:0]	Bits 7-0	0000 0000	0
		0000 0001	0.1
		0000 0010	0.2
		0000 0011	0.3
		0000 0100	0.4
		…	…
		1111 1101	25.3
		1111 1110	25.4
		1111 1111	25.5

ENABLES (0BH) – ENABLES REGISTER

D7	D6	D5	D4	D3	D2	D1	D0
pwm_sync	**nstby**	**en_boost**			**en_autoload**	**rgb_sel[1:0]**	
rw-0	rw-0	rw-0	r-0	r-0	rw-1	rw-0	rw-0

pwm_sync	Bit 7	0 – synchronization to external clock disabled 1 – synchronization to external clock enabled			
nstby	Bit 6	0 – LP39542 standby mode 1 – LP39542 active mode			
en_boost	Bit 5	0 – boost converter disabled 1 – boost converter enabled			
en_autoload	Bit 2	0 – internal boost converter loader off 1 – internal boost converter loader on			
rgb_sel[1:0]	Bits 1-0	**Color LED control mode selection**			
		rgb_sel[1:0]	**Audio sync**	**Pattern generator**	**Blinking sequence**
		00	-	RGB1 & RGB2	-
		01	-	RGB2	RGB1
		10	RGB2	RGB1	-
		11	RGB1 & RGB2	-	-

ADC_OUTPUT (0CH) – ADC DATA REGISTER

D7	D6	D5	D4	D3	D2	D1	D0
data[7:0]							
r-0	r-0	r-0	r-0	r-0	r-0	r-0	r-0

data[7:0]	Bits 7-0	Data register ADC (Audio input, light or temperature sensors)

Copyright © 2007–2013, Texas Instruments Incorporated

BOOST_OUTPUT (0DH) – BOOST OUTPUT VOLTAGE CONTROL REGISTER

D7	D6	D5	D4	D3	D2	D1	D0
Boost[7:0]							
rw-0	rw-0	rw-1	rw-1	rw-1	rw-1	rw-1	rw-1

		Adjustment	
		Boost[7:0]	**Typical boost output (V)**
Boost[7:0]	Bits 7-0	0000 0000	4.00
		0000 0001	4.25
		0000 0011	4.40
		0000 0111	4.55
		0000 1111	4.70
		0001 1111	4.85
		0011 1111	5.00 (default)
		0111 1111	5.15
		1111 1111	5.30

BOOST_FRQ (0EH) – BOOST FREQUENCY CONTROL REGISTER

D7	D6	D5	D4	D3	D2	D1	D0
					freq_sel[2:0]		
r-0	r-0	r-0	r-0	r-0	rw-1	rw-1	rw-1

		Adjustment	
		freq_sel[2:0]	**Frequency**
freq_sel[2:0]	Bits 7-0	1xx	2.00 MHz
		01x	1.67 MHz
		00x	1.00 MHz

HC_FLASH (10H) – HIGH CURRENT FLASH DRIVER CONTROL REGISTER

D7	D6	D5	D4	D3	D2	D1	D0
	en_safety	**hc_pwm**	**fl_t[1:0]**		**hc[1:0]**		**en_hcflash**
r-0	rw-0	rw-0	rw-0	rw-0	rw-0	rw-0	rw-0

en_safety	Bit 6	0 - flash timeout feature disabled 1 - flash timeout feature enabled	
hc_pwm	Bit 5	0 – ext. PWM for high current flash driver disabled 1 – ext. PWM for high current flash driver enabled	
fl_t[1:0]	Bits 4-3	**Flash duration for high current driver**	
		fl_t[1:0]	**Typical flash duration**
		00	200 ms
		01	400 ms
		10	600 ms
		11	EN_FLASH pin on duration
hc[1:0]	Bits 2-1	**Current control for high current flash driver**	
		hc[1:0]	**current**
		00	$0.25 \times I_{MAX(FLASH)}$
		01	$0.50 \times I_{MAX(FLASH)}$
		10	$0.75 \times I_{MAX(FLASH)}$
		11	$1.00 \times I_{MAX(FLASH)}$
en_hcflash	Bit 0	0 – high current flash driver disabled 1 – high current flash driver enabled	

PATTERN_GEN_CTRL (11H) – PATTERN GENERATOR CONTROL REGISTER

D7	D6	D5	D4	D3	D2	D1	D0
				en_blink	**rgb_start**	**loop**	**log**
r-0	r-0	r-0	r-0	rw-0	rw-0	rw-0	rw-0

en_blink	Bit 3	0 - blinking sequences start bit disabled 1 - blinking sequences start bit enabled
rgb_start	Bit 2	0 – pattern generator disabled 1 – execution pattern starting from command 1
loop	Bit 1	0 – pattern generator loop disabled (single pattern) 1 – pattern generator loop enabled (execute until stopped)
log	Bit 0	0 – color intensity mode 0 1 – color intensity mode 1

Copyright © 2007–2013, Texas Instruments Incorporated

RGB1_MAX_CURRENT (12H) – RGB1 DRIVER INDIVIDUAL MAXIMUM CURRENT CONTROL REGISTER

D7	D6	D5	D4	D3	D2	D1	D0
		ir1[1:0]		**ig1[1:0]**		**ib1[1:0]**	
r-0	r-0	rw-0	rw-0	rw-0	rw-0	rw-0	rw-0

		Maximum current for R1 driver	
ir1[1:0]	Bits 5-4	**ir1[2:0]**	**Maximum output current**
		00	$0.25 \times I_{MAX}$
		01	$0.50 \times I_{MAX}$
		10	$0.75 \times I_{MAX}$
		11	$1.00 \times I_{MAX}$
		Maximum current for G1 driver	
ig1[1:0]	Bits 3-2	**ig2[1:0]**	**Maximum output current**
		00	$0.25 \times I_{MAX}$
		01	$0.50 \times I_{MAX}$
		10	$0.75 \times I_{MAX}$
		11	$1.00 \times I_{MAX}$
		Maximum current for B1 driver	
ib1[1:0]	Bits 1-0	**ib1[1:0]**	**Maximum output current**
		00	$0.25 \times I_{MAX}$
		01	$0.50 \times I_{MAX}$
		10	$0.75 \times I_{MAX}$
		11	$1.00 \times I_{MAX}$

RGB2_MAX_CURRENT (13H) – RGB2 DRIVER INDIVIDUAL MAXIMUM CURRENT CONTROL REGISTER

D7	D6	D5	D4	D3	D2	D1	D0
		ir2[1:0]		**ig2[1:0]**		**ib2[1:0]**	
r-0	r-0	rw-0	rw-0	rw-0	rw-0	rw-0	rw-0

		Maximum current for R2 driver	
ir2[1:0]	Bits 5-4	**ir2[2:0]**	**Maximum output current**
		00	$0.25 \times I_{MAX}$
		01	$0.50 \times I_{MAX}$
		10	$0.75 \times I_{MAX}$
		11	$1.00 \times I_{MAX}$
		Maximum current for G2 driver	
ig2[1:0]	Bits 3-2	**ig2[1:0]**	**Maximum output current**
		00	$0.25 \times I_{MAX}$
		01	$0.50 \times I_{MAX}$
		10	$0.75 \times I_{MAX}$
		11	$1.00 \times I_{MAX}$
		Maximum current for B2 driver	
ib2[1:0]	Bits 1-0	**ib2[1:0]**	**Maximum output current**
		00	$0.25 \times I_{MAX}$
		01	$0.50 \times I_{MAX}$
		10	$0.75 \times I_{MAX}$
		11	$1.00 \times I_{MAX}$

Copyright © 2007–2013, Texas Instruments Incorporated

AUDIO_SYNC_CTRL1 (2AH) – AUDIO SYNCHRONIZATION AND ADC CONTROL REGISTER 1

D7	D6	D5	D4	D3	D2	D1	D0
gain_sel[2:0]			**sync_mode**	**en_agc**	**en_sync**	**input_sel[1:0]**	
rw-0	rw-0	rw-0	rw-0	rw-0	rw-0	rw-1	rw-1

gain_sel[2:0]	Bits 7-5	**Input signal gain control**	
		gain_sel[2:0]	**gain, dB**
		000	0 (default)
		001	3
		010	6
		011	9
		100	12
		101	15
		110	18
		111	21
sync_mode	Bit 4	**Input filter mode control** 0 – Amplitude mode 1 – Frequency mode	
en_agc	Bit 3	0 – automatic gain control disabled 1 – automatic gain control enabled	
en_sync	Bit 2	0 – audio synchronization disabled 1 – audio synchronization enabled	
input_sel[1:0]	Bits 1-0	**ADC input selector**	
		input_sel[1:0]	**Input**
		00	Single ended input signal (ASE)
		01	Temperature measurement
		10	Ambient light measurement
		11	No input (default)

AUDIO_SYNC_CTRL2 (2BH) – AUDIO SYNCHRONIZATION AND ADC CONTROL REGISTER 2

D7	D6	D5	D4	D3	D2	D1	D0
			en_avg	**mode_ctrl[1:0]**		**speed_ctrl[1:0]**	
r-0	r-0	r-0	rw-0	rw-0	rw-0	rw-0	rw-0

en_avg	Bit 4	0 – averaging disabled. f_{sample} = 122 Hz, data in register changes every 8.2 ms. 1 – averaging enabled. f_{sample} = 244 Hz, averaging of 64 samples, data in register changes every 262 ms (3.2Hz).	
mode_ctrl[1:0]	Bits 3-2	Filtering mode control	
speed_ctrl[1:0]	Bits 1-0	LEDs light response time to audio input	
		speed_ctrl[1:0]	**Response**
		00	FASTEST (default)
		01	FAST
		10	MEDIUM
		11	SLOW

Copyright © 2007–2013, Texas Instruments Incorporated

PATTERN CONTROL REGISTERS

Command_[1:8]A – Pattern Control Register A							
D7	D6	D5	D4	D3	D2	D1	D0
r[2:0]			**g[2:0]**			**cet[3:2]**	
rw-0	rw-0	rw-0	rw-0	rw-0	rw-0	rw-0	rw-0

Command_[1:8]B – Pattern Control Register B							
D7	D6	D5	D4	D3	D2	D1	D0
cet[1:0]		**b[2:0]**			**tt[2:0]**		
rw-0	rw-0	rw-0	rw-0	rw-0	rw-0	rw-0	rw-0

		Red color intensity		
		r[2:0]	**current, %**	
			log=0	**log=1**
r[2:0]	Bits 7-5A	**000**	$0\times I_{MAX}$	$0\times I_{MAX}$
		001	$7\%\times I_{MAX}$	$1\%\times I_{MAX}$
		010	$14\%\times I_{MAX}$	$2\%\times I_{MAX}$
		011	$21\%\times I_{MAX}$	$4\%\times I_{MAX}$
		100	$32\%\times I_{MAX}$	$10\%\times I_{MAX}$
		101	$46\%\times I_{MAX}$	$21\%\times I_{MAX}$
		110	$71\%\times I_{MAX}$	$46\%\times I_{MAX}$
		111	$100\%\times I_{MAX}$	$100\%\times I_{MAX}$
		Green color intensity		
		g[2:0]	**current, %**	
			log=0	**log=1**
g[2:0]	Bits 4-2A	**000**	$0\times I_{MAX}$	$0\times I_{MAX}$
		001	$7\%\times I_{MAX}$	$1\%\times I_{MAX}$
		010	$14\%\times I_{MAX}$	$2\%\times I_{MAX}$
		011	$21\%\times I_{MAX}$	$4\%\times I_{MAX}$
		100	$32\%\times I_{MAX}$	$10\%\times I_{MAX}$
		101	$46\%\times I_{MAX}$	$21\%\times I_{MAX}$
		110	$71\%\times I_{MAX}$	$46\%\times I_{MAX}$
		111	$100\%\times I_{MAX}$	$100\%\times I_{MAX}$

Copyright © 2007–2013, Texas Instruments Incorporated

cet[3:0]	Bits 1-0A 7-6B	**Command execution time**		
		cet[3:0]	**CET duration, ms**	
		0000	197	
		0001	393	
		0010	590	
		0011	786	
		0100	983	
		0101	1180	
		0110	1376	
		0111	1573	
		1000	1769	
		1001	1966	
		1010	2163	
		1011	2359	
		1100	2556	
		1101	2753	
		1110	2949	
		1111	3146	
b[2:0]	Bits 5-3B	**Blue color intensity**		
		b[2:0]	**current, %**	
			log=0	**log=1**
		000	$0 \times I_{MAX}$	$0 \times I_{MAX}$
		001	$7\% \times I_{MAX}$	$1\% \times I_{MAX}$
		010	$14\% \times I_{MAX}$	$2\% \times I_{MAX}$
		011	$21\% \times I_{MAX}$	$4\% \times I_{MAX}$
		100	$32\% \times I_{MAX}$	$10\% \times I_{MAX}$
		101	$46\% \times I_{MAX}$	$21\% \times I_{MAX}$
		110	$71\% \times I_{MAX}$	$46\% \times I_{MAX}$
		111	$100\% \times I_{MAX}$	$100\% \times I_{MAX}$
tt[2:0]	Bits 2-0B	**Transition time**		
		tt[2:0]	**Transition time, ms**	
		000	0	
		001	55	
		010	110	
		011	221	
		100	442	
		101	885	
		110	1770	
		111	3539	

RESET (60H) - RESET REGISTER

D7	D6	D5	D4	D3	D2	D1	D0
Writing any data to Reset Register in address 60H can reset LP39542							
w-0	w-0	w-0	w-0	w-0	w-0	w-0	w-0

Copyright © 2007–2013, Texas Instruments Incorporated

REVISION HISTORY

Changes from Revision A (May 2013) to Revision B	Page
• Changed layout of National Data Sheet to TI format	56

PACKAGING INFORMATION

Orderable Device	Status (1)	Package Type	Package Drawing	Pins	Package Qty	Eco Plan (2)	Lead/Ball Finish (6)	MSL Peak Temp (3)	Op Temp (°C)	Device Marking (4/5)	Samples
LP39542RL/NOPB	ACTIVE	DSBGA	YPG	36		TBD	Call TI	Call TI		D60B	Samples
LP39542RLX/NOPB	ACTIVE	DSBGA	YPG	36		TBD	Call TI	Call TI		D60B	Samples
LP39542TL/NOPB	ACTIVE	DSBGA	YZR	36		TBD	Call TI	Call TI	-30 to 85	D58B	Samples
LP39542TLX/NOPB	ACTIVE	DSBGA	YZR	36		TBD	Call TI	Call TI	-30 to 85	D58B	Samples

(1) The marketing status values are defined as follows:
ACTIVE: Product device recommended for new designs.
LIFEBUY: TI has announced that the device will be discontinued, and a lifetime-buy period is in effect.
NRND: Not recommended for new designs. Device is in production to support existing customers, but TI does not recommend using this part in a new design.
PREVIEW: Device has been announced but is not in production. Samples may or may not be available.
OBSOLETE: TI has discontinued the production of the device.

(2) Eco Plan - The planned eco-friendly classification: Pb-Free (RoHS), Pb-Free (RoHS Exempt), or Green (RoHS & no Sb/Br) - please check http://www.ti.com/productcontent for the latest availability information and additional product content details.
TBD: The Pb-Free/Green conversion plan has not been defined.
Pb-Free (RoHS): TI's terms "Lead-Free" or "Pb-Free" mean semiconductor products that are compatible with the current RoHS requirements for all 6 substances, including the requirement that lead not exceed 0.1% by weight in homogeneous materials. Where designed to be soldered at high temperatures, TI Pb-Free products are suitable for use in specified lead-free processes.
Pb-Free (RoHS Exempt): This component has a RoHS exemption for either 1) lead-based flip-chip solder bumps used between the die and package, or 2) lead-based die adhesive used between the die and leadframe. The component is otherwise considered Pb-Free (RoHS compatible) as defined above.
Green (RoHS & no Sb/Br): TI defines "Green" to mean Pb-Free (RoHS compatible), and free of Bromine (Br) and Antimony (Sb) based flame retardants (Br or Sb do not exceed 0.1% by weight in homogeneous material)

(3) MSL, Peak Temp. - The Moisture Sensitivity Level rating according to the JEDEC industry standard classifications, and peak solder temperature.

(4) There may be additional marking, which relates to the logo, the lot trace code information, or the environmental category on the device.

(5) Multiple Device Markings will be inside parentheses. Only one Device Marking contained in parentheses and separated by a "~" will appear on a device. If a line is indented then it is a continuation of the previous line and the two combined represent the entire Device Marking for that device.

(6) Lead/Ball Finish - Orderable Devices may have multiple material finish options. Finish options are separated by a vertical ruled line. Lead/Ball Finish values may wrap to two lines if the finish value exceeds the maximum column width.

Important Information and Disclaimer: The information provided on this page represents TI's knowledge and belief as of the date that it is provided. TI bases its knowledge and belief on information provided by third parties, and makes no representation or warranty as to the accuracy of such information. Efforts are underway to better integrate information from third parties. TI has taken and continues to take reasonable steps to provide representative and accurate information but may not have conducted destructive testing or chemical analysis on incoming materials and chemicals. TI and TI suppliers consider certain information to be proprietary, and thus CAS numbers and other limited information may not be available for release.

In no event shall TI's liability arising out of such information exceed the total purchase price of the TI part(s) at issue in this document sold by TI to Customer on an annual basis.

TAPE AND REEL INFORMATION

REEL DIMENSIONS

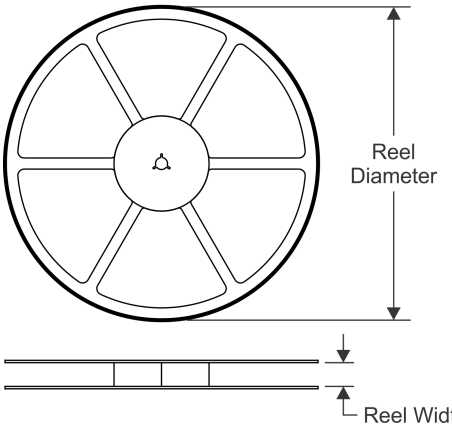

TAPE DIMENSIONS

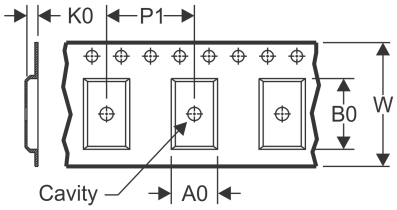

A0	Dimension designed to accommodate the component width
B0	Dimension designed to accommodate the component length
K0	Dimension designed to accommodate the component thickness
W	Overall width of the carrier tape
P1	Pitch between successive cavity centers

QUADRANT ASSIGNMENTS FOR PIN 1 ORIENTATION IN TAPE

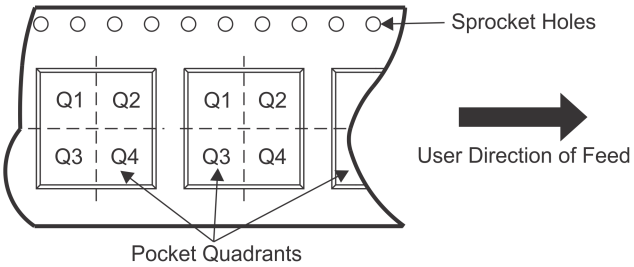

*All dimensions are nominal

Device	Package Type	Package Drawing	Pins	SPQ	Reel Diameter (mm)	Reel Width W1 (mm)	A0 (mm)	B0 (mm)	K0 (mm)	P1 (mm)	W (mm)	Pin1 Quadrant
LP39542RL/NOPB	DSBGA	YPG	36	250	178.0	12.4	3.21	3.21	0.76	8.0	12.0	Q1
LP39542RLX/NOPB	DSBGA	YPG	36	1000	178.0	12.4	3.21	3.21	0.76	8.0	12.0	Q1
LP39542TL/NOPB	DSBGA	YZR	36	250	178.0	12.4	3.21	3.21	0.76	8.0	12.0	Q1
LP39542TLX/NOPB	DSBGA	YZR	36	1000	178.0	12.4	3.21	3.21	0.76	8.0	12.0	Q1

TAPE AND REEL BOX DIMENSIONS

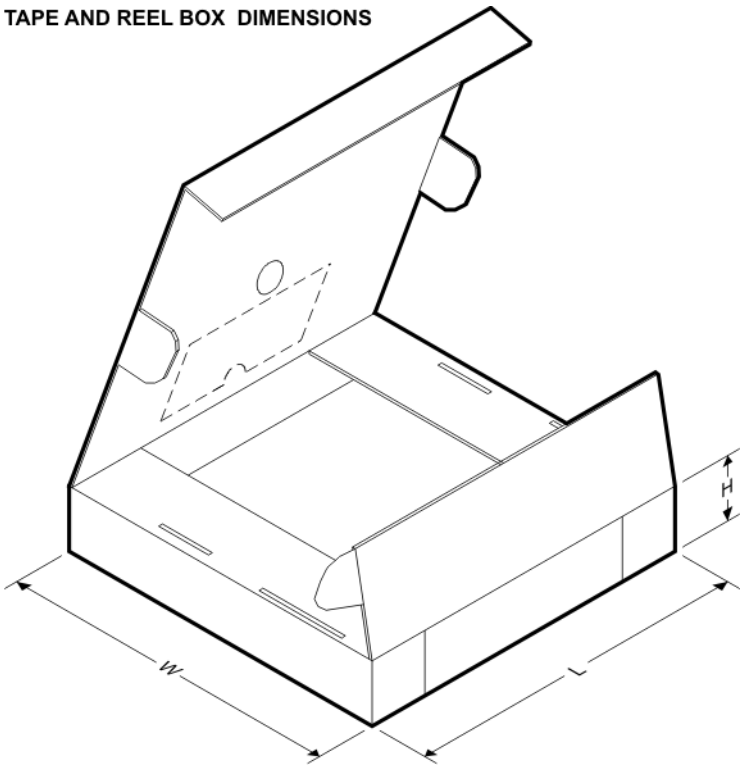

*All dimensions are nominal

Device	Package Type	Package Drawing	Pins	SPQ	Length (mm)	Width (mm)	Height (mm)
LP39542RL/NOPB	DSBGA	YPG	36	250	210.0	185.0	35.0
LP39542RLX/NOPB	DSBGA	YPG	36	1000	210.0	185.0	35.0
LP39542TL/NOPB	DSBGA	YZR	36	250	210.0	185.0	35.0
LP39542TLX/NOPB	DSBGA	YZR	36	1000	210.0	185.0	35.0

YPG0036

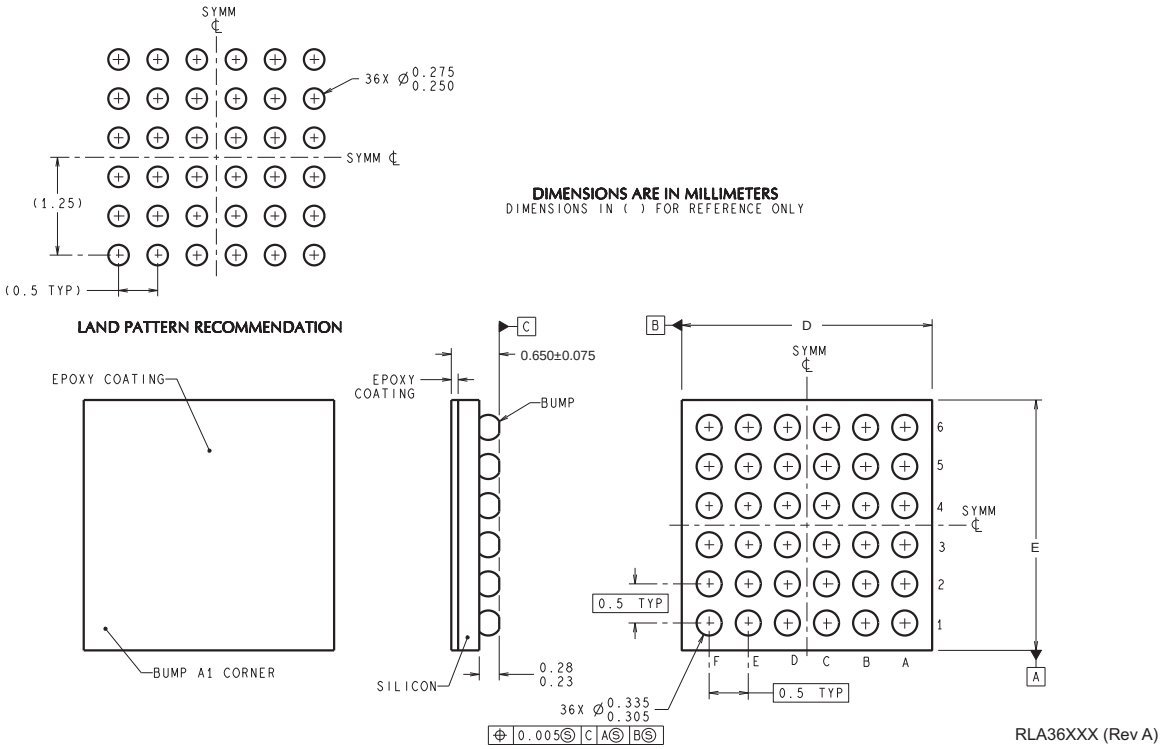

4214895/A 12/12

NOTES: A. All linear dimensions are in millimeters. Dimensioning and tolerancing per ASME Y14.5M-1994.
B. This drawing is subject to change without notice.

YZR0036

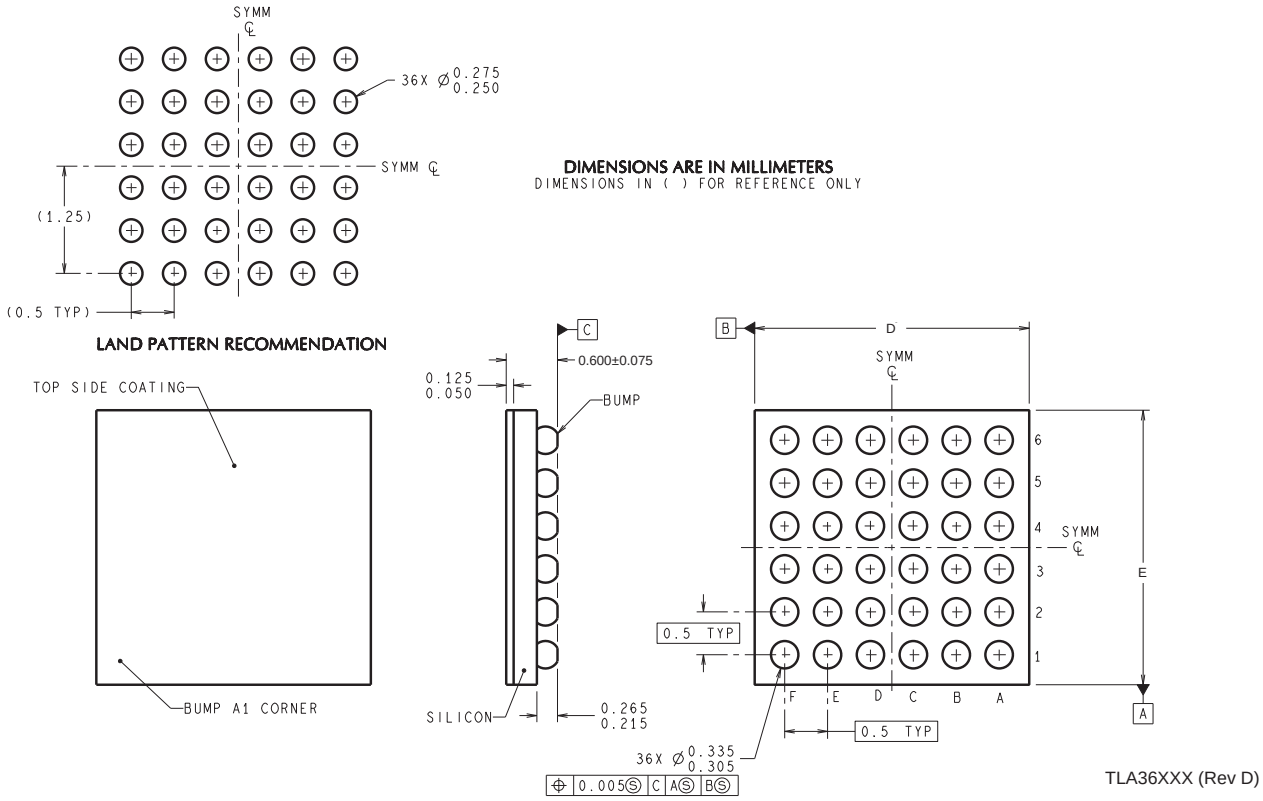

4215058/A 12/12

NOTES: A. All linear dimensions are in millimeters. Dimensioning and tolerancing per ASME Y14.5M-1994.
B. This drawing is subject to change without notice.

IMPORTANT NOTICE

Texas Instruments Incorporated and its subsidiaries (TI) reserve the right to make corrections, enhancements, improvements and other changes to its semiconductor products and services per JESD46, latest issue, and to discontinue any product or service per JESD48, latest issue. Buyers should obtain the latest relevant information before placing orders and should verify that such information is current and complete. All semiconductor products (also referred to herein as “components”) are sold subject to TI’s terms and conditions of sale supplied at the time of order acknowledgment.

TI warrants performance of its components to the specifications applicable at the time of sale, in accordance with the warranty in TI’s terms and conditions of sale of semiconductor products. Testing and other quality control techniques are used to the extent TI deems necessary to support this warranty. Except where mandated by applicable law, testing of all parameters of each component is not necessarily performed.

TI assumes no liability for applications assistance or the design of Buyers’ products. Buyers are responsible for their products and applications using TI components. To minimize the risks associated with Buyers’ products and applications, Buyers should provide adequate design and operating safeguards.

TI does not warrant or represent that any license, either express or implied, is granted under any patent right, copyright, mask work right, or other intellectual property right relating to any combination, machine, or process in which TI components or services are used. Information published by TI regarding third-party products or services does not constitute a license to use such products or services or a warranty or endorsement thereof. Use of such information may require a license from a third party under the patents or other intellectual property of the third party, or a license from TI under the patents or other intellectual property of TI.

Reproduction of significant portions of TI information in TI data books or data sheets is permissible only if reproduction is without alteration and is accompanied by all associated warranties, conditions, limitations, and notices. TI is not responsible or liable for such altered documentation. Information of third parties may be subject to additional restrictions.

Resale of TI components or services with statements different from or beyond the parameters stated by TI for that component or service voids all express and any implied warranties for the associated TI component or service and is an unfair and deceptive business practice. TI is not responsible or liable for any such statements.

Buyer acknowledges and agrees that it is solely responsible for compliance with all legal, regulatory and safety-related requirements concerning its products, and any use of TI components in its applications, notwithstanding any applications-related information or support that may be provided by TI. Buyer represents and agrees that it has all the necessary expertise to create and implement safeguards which anticipate dangerous consequences of failures, monitor failures and their consequences, lessen the likelihood of failures that might cause harm and take appropriate remedial actions. Buyer will fully indemnify TI and its representatives against any damages arising out of the use of any TI components in safety-critical applications.

In some cases, TI components may be promoted specifically to facilitate safety-related applications. With such components, TI’s goal is to help enable customers to design and create their own end-product solutions that meet applicable functional safety standards and requirements. Nonetheless, such components are subject to these terms.

No TI components are authorized for use in FDA Class III (or similar life-critical medical equipment) unless authorized officers of the parties have executed a special agreement specifically governing such use.

Only those TI components which TI has specifically designated as military grade or “enhanced plastic” are designed and intended for use in military/aerospace applications or environments. Buyer acknowledges and agrees that any military or aerospace use of TI components which have ***not*** been so designated is solely at the Buyer's risk, and that Buyer is solely responsible for compliance with all legal and regulatory requirements in connection with such use.

TI has specifically designated certain components as meeting ISO/TS16949 requirements, mainly for automotive use. In any case of use of non-designated products, TI will not be responsible for any failure to meet ISO/TS16949.

Products		**Applications**	
Audio	www.ti.com/audio	Automotive and Transportation	www.ti.com/automotive
Amplifiers	amplifier.ti.com	Communications and Telecom	www.ti.com/communications
Data Converters	dataconverter.ti.com	Computers and Peripherals	www.ti.com/computers
DLP® Products	www.dlp.com	Consumer Electronics	www.ti.com/consumer-apps
DSP	dsp.ti.com	Energy and Lighting	www.ti.com/energy
Clocks and Timers	www.ti.com/clocks	Industrial	www.ti.com/industrial
Interface	interface.ti.com	Medical	www.ti.com/medical
Logic	logic.ti.com	Security	www.ti.com/security
Power Mgmt	power.ti.com	Space, Avionics and Defense	www.ti.com/space-avionics-defense
Microcontrollers	microcontroller.ti.com	Video and Imaging	www.ti.com/video
RFID	www.ti-rfid.com		
OMAP Applications Processors	www.ti.com/omap	**TI E2E Community**	e2e.ti.com
Wireless Connectivity	www.ti.com/wirelessconnectivity		

Mailing Address: Texas Instruments, Post Office Box 655303, Dallas, Texas 75265
Copyright © 2015, Texas Instruments Incorporated